United States General Accounting Office

GAO

Report to the Chairman, Committee on the Budget, House of Representatives

August 2003

DOD CONTRACT PAYMENTS

Management Action Needed to Reduce Billions in Adjustments to Contract Payment Records

G A O

Accountability ⋆ Integrity ⋆ Reliability

GAO-03-727

August 2003

DOD CONTRACT PAYMENTS

Management Action Needed to Reduce Billions in Adjustments to Contract Payment Records

GAO Accountability • Integrity • Reliability

Highlights

Highlights of GAO-03-727, a report to the Chairman, Committee on the Budget, House of Representatives

Why GAO Did This Study

GAO has reported that the Department of Defense's (DOD) inability to accurately account for and report on disbursements is a long-term, major problem. GAO was requested to determine (1) the magnitude of the adjustments and related costs in fiscal year 2002, (2) why contracts, including payment terms, are so complex, (3) the key factors that caused Defense Finance and Accounting Service (DFAS) Columbus to make payment adjustments, and (4) what steps DOD is taking to address the payment allocation problems.

What GAO Recommends

GAO recommends that DOD (1) develop options for presenting standard payment instructions in contracts and (2) automate those instructions in the Mechanization of Contract Administration Services (MOCAS) system. GAO also recommends that DOD's contracting community and DFAS follow existing regulations and procedures concerning contract payment instructions. In its comments, DOD concurred with two recommendations and partially concurred with two others related to developing and automating the standard payment instructions. DOD stated that although the working group would analyze their feasibility, until the coordination and review process was completed, it could not commit to these actions. We continue to believe that decisive steps towards a lasting solution are needed to address DOD's long-standing contract payment problems.

www.gao.gov/cgi-bin/getrpt?GAO-03-727.

To view the full report, including the scope and methodology, click on the link above. For more information, contact Gregory D. Kutz at (202) 512-9505 or kutzg@gao.gov.

What GAO Found

For fiscal year 2002, DFAS Columbus data showed that about $1 of every $4 in contract payment transactions in the MOCAS system was for adjustments to previously recorded payments—$49 billion of adjustments out of $198 billion in transactions. To research payment allocation problems, DFAS Columbus reported that it incurred costs of about $34 million in fiscal year 2002. This represents about 35 percent of the total $97 million that DFAS Columbus spent on contract pay services. DFAS Columbus bills DOD activities for contract pay services based on the number of accounting lines on an invoice. Consequently, all DOD activities pay the same line rate, regardless of whether substantial work is needed to reconcile problem contracts and adjust payment records.

GAO's analysis of two contracts showed that the contracts were complex because of the (1) legal and DOD requirements to track and report on the funds used to finance the contracts, (2) substantial number of modifications made on the contracts to procure goods and/or services, and (3) different pricing provisions on the contracts. GAO's review of $160 million of adjustments showed that the adjustments were made for four reasons:

- The Army made an error in accounting for obligations, resulting in about $127 million in payment allocation adjustments.
- DFAS Columbus did not follow its internal procedures for allocating payments to accounts on an Army contract containing multiple pricing provisions, resulting in about $5 million in adjustments.
- DFAS made over $2 million in adjustments to correct recording errors on an Army contract due to complex and changing payment instructions.
- The Air Force frequently changed payment instructions after payments were made on an Air Force contract, resulting in about $26 million in adjustments.

DOD has initiated a major long-term effort to improve its business operations, including its acquisition and disbursement activities. If implemented successfully, this initiative may help correct many of the contract payment allocation problems. In the interim, DOD has initiatives under way to address payment allocation problems, including (1) billing DOD contracting offices for contract reconciliation services, (2) providing DOD activities information on the correct method for presenting payment instructions, and (3) establishing a working group to develop options for presenting standard contract payment instructions. While the DOD working group initiative may reduce payment allocation errors associated with misinterpreting contract payment instructions, DOD needs to automate the standard payment instructions to eliminate payment allocation errors associated with manually allocated payments.

Contents

Letter

1

Results in Brief 2
Background 5
DFAS Columbus Made $49 Billion of Adjustments at a Cost of about $34 Million in Fiscal Year 2002 12
Contracts Were Complex Due to Legal and DOD Requirements, Contract Modifications, and Pricing Provisions 12
Reasons for DFAS Columbus Making $160 Million of Adjustments to Correct Prior Payment Allocations 17
DOD Initiatives to Address Payment Allocation Problems 23
Conclusions 27
Recommendations for Executive Action 28
Agency Comments and Our Evaluation 29

Appendixes

Appendix I: Scope and Methodology 32

Appendix II: Comments from the Department of Defense 34

Appendix III: GAO Contact and Staff Acknowledgments 37
GAO Contact 37
Acknowledgments 37

Related GAO Products 38

Table

Table 1: Reasons for $160 Million in Contract Payment Adjustments for Two Contracts 17

Figures

Figure 1: Sample Line of Accounting on the Air Force Contract 6
Figure 2: Payment Process Information Flow for the Air Force Contract 7
Figure 3: Army Tactical Missile Launched from Multiple Launch Rocket System 10
Figure 4: Army Data Link System Transferring Information Collected by Aircraft, Satellites, and Ground Stations 11
Figure 5: Contract Funding Structure for Three Contract Line Items on the Air Force Contract 22

This is a work of the U.S. government and is not subject to copyright protection in the United States. It may be reproduced and distributed in its entirety without further permission from GAO. However, because this work may contain copyrighted images or other material, permission from the copyright holder may be necessary if you wish to reproduce this material separately.

G A O
Accountability * Integrity * Reliability

United States General Accounting Office
Washington, D.C. 20548

August 8, 2003

The Honorable Jim Nussle
Chairman
Committee on the Budget
House of Representatives

Dear Mr. Chairman:

The reliability of contract disbursing data is critical to the Department of Defense (DOD) for (1) properly accounting for and accurately making contract payments, (2) effectively accounting for and controlling billions of dollars in budget authority, and (3) preparing reliable financial information on the results of operations to support management and congressional decision making on programs, operations, and budget requests. We have previously reported[1] on DOD's inability to accurately account for and report on disbursements, which is a long-term problem that is pervasive and complex in nature. For example, Defense Finance and Accounting Service (DFAS) Columbus fiscal year 1999 data showed that almost $1 of every $3 in contract payment transactions in the Mechanization of Contract Administration Services (MOCAS) system was for adjustments to previously recorded payments—$51 billion of adjustments out of $157 billion in transactions.

You asked that we determine (1) the magnitude of adjustments that affected previously recorded payments and DFAS Columbus's reported cost to make these adjustments during fiscal year 2002, (2) why contracts, including payment instructions, were so complex, (3) the key factors that caused DFAS Columbus to make payment adjustments for the two contracts that we reviewed in detail, and (4) what steps DOD has taken or planned to address the adjustment problem. As agreed with your office, we analyzed two contracts to determine how complex contracts and related payment instructions contributed to DOD's payments not being properly allocated to the correct obligations. In selecting these two contracts, we worked with DFAS Columbus to identify complex contracts for which they had encountered problems with correctly allocating payments to obligations. Thus, the two contracts—a $565 million Army missile contract and a $49 million Air Force communications contract—are not

[1]See Related GAO Products at the end of this report.

representative of all DOD contracts but, based on our experience, have characteristics similar to other complex contracts.

Our review was performed from August 2002 through July 2003 in accordance with U.S. generally accepted government auditing standards. We did not audit the DFAS Columbus data on disbursements, collections, and adjustments or the costs incurred by DFAS Columbus to reconcile contracts. Further details on our scope and methodology can be found in appendix I. We requested comments on a draft of this report from the Secretary of Defense or his designee. Written comments from the Director, Defense Procurement and Acquisition Policy, Under Secretary of Defense (Acquisition, Technology, and Logistics), are reprinted in appendix II.

Results in Brief

For fiscal year 2002, DFAS Columbus data showed that about $1 of every $4 in contract payment transactions in MOCAS was for adjustments to previously recorded payments—$49 billion of adjustments out of $198 billion in disbursement, collection, and adjustment transactions. This is an improvement over fiscal year 1999 when reported adjustments represented $1 of every $3 in contract payment transactions. To research the payment allocation problems and make adjustments to correct the disbursing and accounting records, DFAS Columbus reported that it incurred costs of about $34 million in fiscal year 2002 primarily for hundreds of DOD and contractor staff. This represents about 35 percent of the total $97 million in reported costs related to the DFAS Columbus contract pay service operations. DFAS Columbus currently bills DOD activities (for example, the Army) for contract pay services based solely on the number of lines of accounting on an invoice. Consequently, all DOD activities pay the same line rate, regardless of whether substantial work is needed to reconcile problem contracts and adjust the payment records. As a result, the contracting offices that contributed to payment allocation problems had insufficient incentives to reduce payment errors and associated costs.

Our analysis of the two contracts we reviewed in detail showed that the contracts and payment instructions were complex because of a combination of factors including the following:

- Legal and DOD requirements to track and report on the funds used to finance the contract. For example, on the $565 million Army missile contract, (1) 74 different accounting classification reference numbers (ACRN)[2] were funded by eight different appropriation accounts and sales to three foreign countries, (2) 24 of the 74 ACRNs were created to comply with legal requirements to report on the appropriations used to finance the contract as well as the types of obligations, such as personnel, supplies, and acquisition of assets, and (3) the remaining 50 ACRNs were created to comply with DOD requirements.

- Substantial number of contract modifications over the years that added goods and/or services, or added or changed payment instructions. For example, the $49 million Air Force communications contract was modified 82 times over a 3-year period, including 73 modifications that changed the payment instructions.

- Different pricing provisions for goods and services on the contract. For example, the Army contract contained 25 separate contract line items[3]—15 were to be paid for under fixed price provisions and 10 were to be paid for under cost reimbursable provisions.

Our analysis of $160 million of adjustments for the two contracts we reviewed showed that 1,458 adjustment transactions were made to reallocate payments to the correct ACRNs for four reasons: (1) the Army made an error in accounting for obligations, resulting in about $127 million in payment allocation adjustments, (2) DFAS Columbus did not follow its internal procedures for allocating payments to ACRNs on an Army contract containing multiple pricing provisions when the Army failed to provide payment instructions, resulting in about $5 million in adjustments, (3) DFAS Columbus made over $2 million in adjustments to correct recording errors on the Army contract due to complex and changing payment instructions, and (4) the Air Force frequently changed payment

[2]For all contracts, the contracting office assigns a two-digit ACRN to each line of accounting containing unique accounting information in accordance with the requirements contained in the Defense Federal Acquisition Regulation Supplement (DFARS). Obligations are established at the ACRN level to ensure that funds are available to cover disbursements. DFAS Columbus allocates the payments to the ACRNs in an attempt to match contractor payments to the corresponding obligations.

[3]According to DFARS 204.7103-1, contracts shall identify the items or services to be acquired as separate contract line items.

instructions after payments were made on the Air Force contract, resulting in about $26 million in adjustments.

Since 1995, DOD had been attempting to develop a new system—called the Defense Procurement Payment System (DPPS)—to resolve DOD's long-standing disbursement problems. However, DOD terminated DPPS in December 2002, after 7 years in development at a reported cost of over $126 million, because of poor program performance and increasing life cycle costs. DOD has now initiated a major long-term effort—referred to as an enterprise architecture—to improve its business operations, including its acquisition and disbursement activities. If implemented successfully, this initiative may help correct many of the contract payment allocation problems.

In the interim, DOD officials informed us they have several efforts under way to address these types of payment allocation problems that would help reduce adjustments made to previously recorded payments. First, beginning in fiscal year 2004, DFAS Columbus plans to realign its billing structure and bill contracting offices for reconciliation services to provide them with an incentive to reduce payment errors and related reconciliation costs. Second, DFAS Columbus, in partnership with the Defense Contract Management Agency, visited major procuring activities throughout DOD and provided information on the correct methods for presenting payment instructions on contracts. Finally, in September 2002, DOD established a working group[4] to develop payment allocation options for presenting standard payment instructions on complex contracts that, if implemented, would be used throughout the DOD contracting community. Our analysis showed that this initiative should help reduce some of the payment allocation errors that are the result of misinterpreted payment instructions but would not completely eliminate payment allocation errors made by DFAS Columbus when it manually allocates payments to contract ACRNs. In order to eliminate payment allocation errors, DOD would need to take the next step in the process and automate the standard payment instructions so that DFAS Columbus can electronically process the payments with minimal manual intervention. The working group has not completed its work and has not yet established a completion date. Further, DOD has not yet made a final decision to implement the payment allocation

[4]The working group consists of representatives from the Offices of the Under Secretary of Defense (Comptroller) and the Under Secretary of Defense (Acquisition, Technology, and Logistics), DFAS Columbus, and the Defense Contract Management Agency.

options for presenting standard payment instructions throughout the DOD contracting community.

We are making recommendations to the Secretary of Defense to improve the process of properly allocating payments to correct ACRNs, including (1) developing payment allocation options for presenting standard payment instructions contained in contracts and (2) automating the standardized payment instructions. We are also making recommendations to the Under Secretaries of Defense (Acquisition, Technology, and Logistics) and (Comptroller) to follow existing regulations and procedures concerning contract payment instructions. In its comments on a draft of this report, DOD concurred with two of the four recommendations and partially concurred with the two recommendations related to developing and automating the standard payment instructions. DOD stated that although the working group would analyze their feasibility, until the coordination and review process was completed, it could not commit to these actions. DOD did not indicate any time frame for completing the coordination and review process referred to in its response. We continue to believe that decisive steps towards a lasting solution in these two areas are essential to address DOD's long-standing contract payment problems.

Background

DFAS Columbus uses MOCAS to make contract payments for the Army, Navy, Air Force, and other DOD organizations. In fiscal year 2002, DFAS Columbus reported that it made about $87 billion of contract payments. DOD, including DFAS Columbus, uses a line of accounting to accumulate appropriation, budget, and management information for contract payments. Figure 1 shows a line of accounting on the Air Force contract that we reviewed.

Figure 1: Sample Line of Accounting on the Air Force Contract

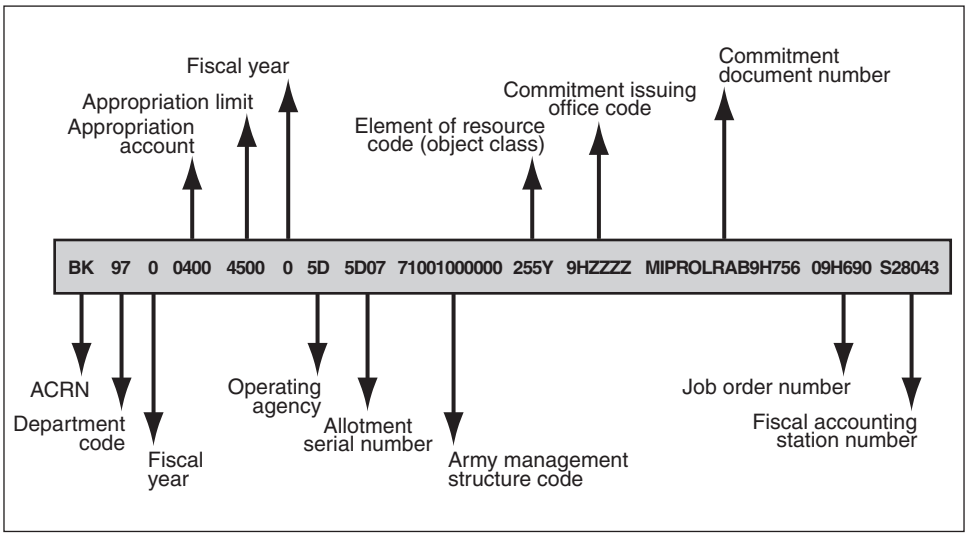

Source: DOD.

A line of accounting provides various information, such as (1) department code (for example, those for the military services) and (2) fiscal year and appropriation account financing the contract. For all contracts, the contracting office assigns an ACRN to each line containing unique accounting information in accordance with the requirements contained in the Defense Federal Acquisition Regulation Supplement (DFARS). Obligations[5] are established at the ACRN level to ensure that funds are available to cover disbursements. DFAS Columbus allocates payment amounts to ACRNs to match contractor payments to the corresponding obligations.

Organizations Involved in the Contract Payment Process

DOD payment and accounting processes are complex, generally involving separate functions carried out by separate offices in different locations using different procurement, accounting, and payment systems. The processes are not always integrated and require data to be entered and

[5]Obligations are the amounts of orders placed, contracts awarded, services received, and similar transactions during an accounting period that will require payment during the same, or a future, period.

sometimes reentered manually. Figure 2 shows the payment process information flow for the Air Force contract that we reviewed.

Figure 2: Payment Process Information Flow for the Air Force Contract

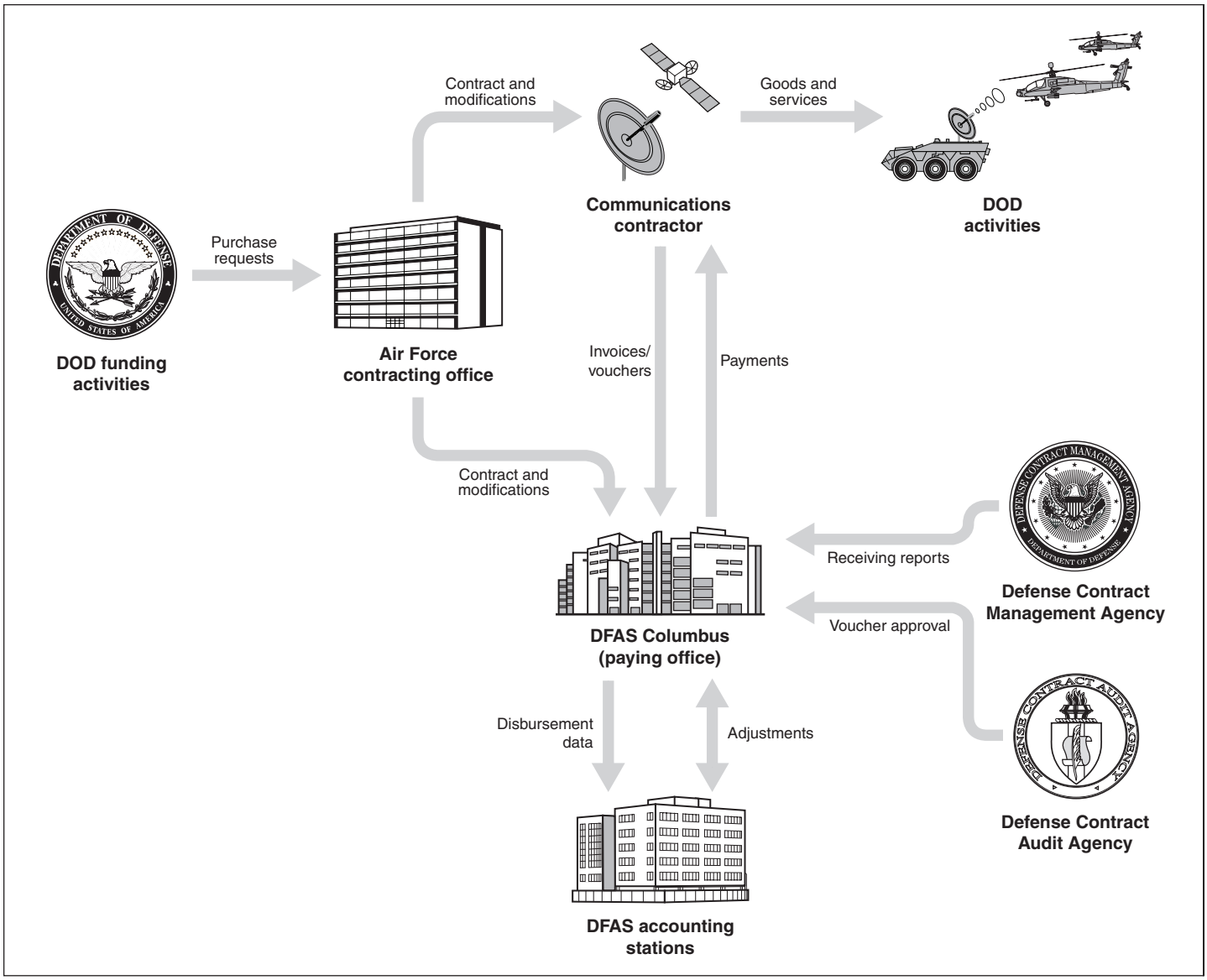

Source: GAO and Art Explosion.

As illustrated above, the payment process information flow for the Air Force contract began when DOD funding activities requested that the Air Force contracting office procure engineering and technical services as well as spare parts. The Air Force contracting office awarded the contract and modified it to procure additional items. The Air Force contracting office forwarded the contract and modifications to several organizations, such as the communications contractor and DFAS Columbus paying office. Upon receipt of the contract and modifications, the communications contractor performed work for the DOD activities and submitted invoices to DFAS Columbus for payment. For goods procured under the contract, the Defense Contract Management Agency, which is located at the contractor's site, accepted the goods on behalf of the DOD activities and provided receiving report information to DFAS Columbus. The communications contractor then forwarded the goods to the DOD activities. For services provided by the contractor, the contractor submitted vouchers for services directly to DFAS Columbus for payment. The vouchers were subject to later audit by the Defense Contract Audit Agency.

Before making payments to the contractor, DFAS Columbus matched the documents—through automated and manual processes—provided by the Air Force contracting office, the communications contractor, and Defense Contract Management Agency to ensure that (1) items ordered were received and (2) funds were obligated and available to make the payments. Finally, DFAS Columbus paid the contractor, recorded the payment data in DFAS Columbus records, and forwarded these data to the DFAS accounting stations responsible for recording the data in the various DOD organizations' accounting systems. When errors occurred in allocating payments to the correct ACRNs, the DFAS Columbus contract reconciliation branch made adjustments to correct the payment allocations in DFAS Columbus and the applicable DFAS accounting station records.

Description of the Army and Air Force Contracts Reviewed

In order to identify some of the problems DFAS Columbus has experienced in properly allocating payments to the ACRNs on contracts, we selected an Army and an Air Force contract for a detailed review. These contracts support two programs—the Army Tactical Missile System and the Army Data Link System. A description of each of these programs is presented below.

- We reviewed an Army contract (contract number DAAH01-98-C-0093) with Lockheed Martin Vought Systems Corporation concerning the Army Tactical Missile System. This missile system is one of a family of

complementary weapons initially developed by the Army and Air Force for engaging enemy forces deep behind the front battle lines. The missile system was designed to attack those forces that are in a position to have an immediate or directly supporting impact on the close-in battle, but are beyond the range of cannon and rocket artillery systems. It is intended to delay, disrupt, neutralize, or destroy targets, such as second echelon maneuver units, missile sites, and forward command posts.

The Army Tactical Missile System consists of a surface-to-surface ballistic missile that can be launched from and controlled by the Army's Multiple Launch Rocket System. The missile system was initially fielded with an "antipersonnel/antimaterial warhead" for attacking stationary targets. Since the weapon system was first fielded, the missile system has been modified to increase its range, improve its guidance systems, and reduce collateral damage. This missile system was used in the recent war in Iraq. Figure 3 is a photograph of the missile system.

Figure 3: Army Tactical Missile Launched from Multiple Launch Rocket System

Source: U.S. Army Aviation and Missile Command, Public Affairs Office.

- We reviewed an Air Force contract (contract number F09604-00-C-0090) with L-3 Communications to maintain the Army portion of the Army Data Link System.[6] The Army and Air Force developed the Army Data Link System to transfer near-real-time targeting information collected by aircraft, satellites, and ground stations and provides this information to aircraft and tactical commanders on the ground in-theater. The system consists of three major components—the Army Interoperable Data Link, the Direct Air to Satellite Relay, and the Reach Back Relay. The Army

[6]In prior years, the Army portion of the Army Data Link System was part of another contract that supported both the Army and Air Force. According to Air Force contracting officials, the Air Force separated its portion from the Army portion of the contract because the contract became difficult to administer due to its size. The Air Force contracting office retained responsibility for administering both the Army and Air Force portions of the data link systems.

Interoperable Data Link provides two-way secure direct communications between aircraft and aircraft-to-ground stations. The Direct Air to Satellite Relay communicates data gathered by aircraft through a secure satellite link to an in-theater ground processing facility. The Reach Back Relay communicates data gathered through a secure satellite link to ground processing facilities in the continental United States. The Data Link System was also used in the recent war in Iraq. Figure 4 shows how the communications system transfers data.

Figure 4: Army Data Link System Transferring Information Collected by Aircraft, Satellites, and Ground Stations

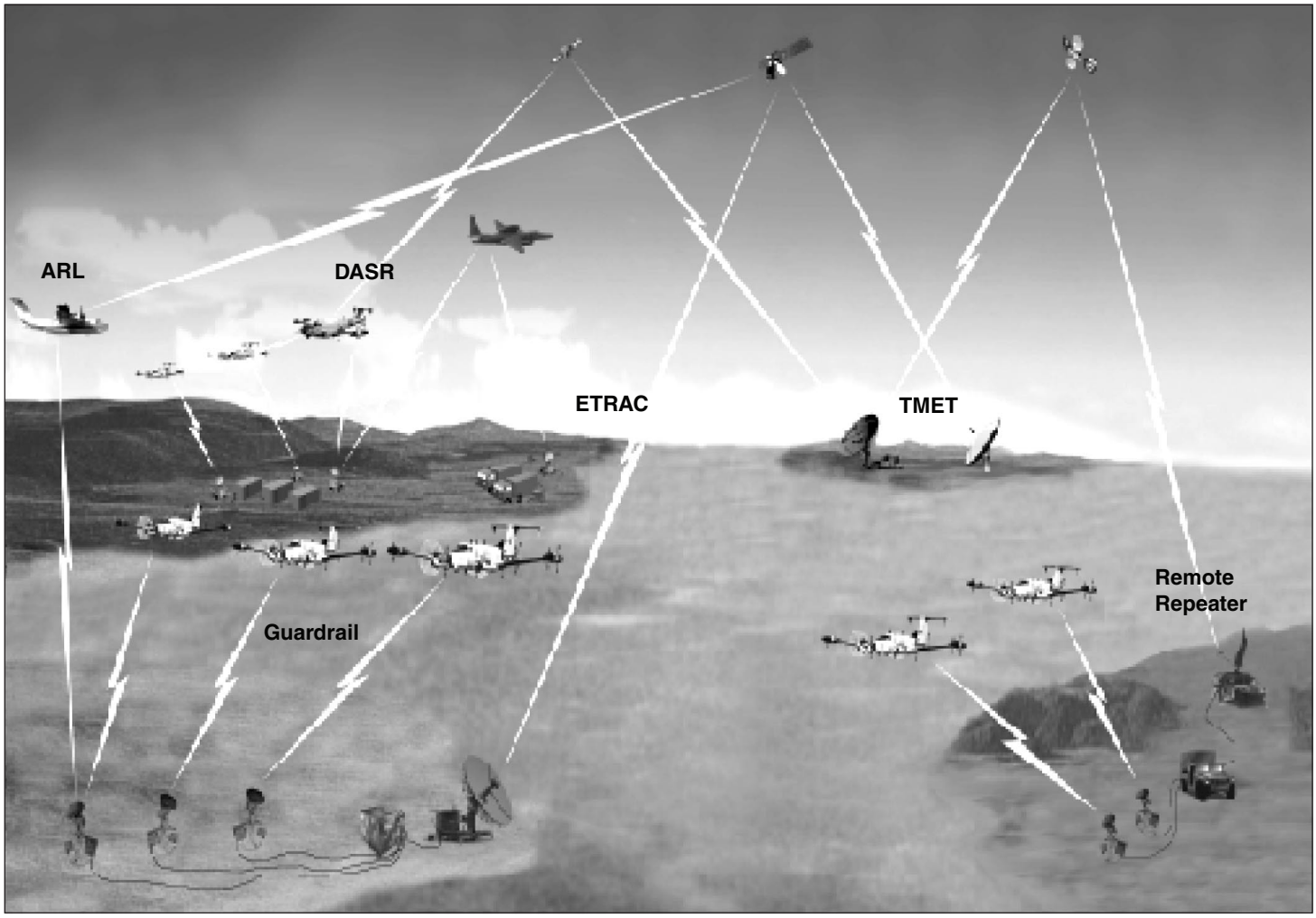

Source: Air Force contractor L-3 Communications.

DFAS Columbus Made $49 Billion of Adjustments at a Cost of about $34 Million in Fiscal Year 2002

For fiscal year 2002, our analysis of DFAS Columbus data showed that about $1 of every $4 in contract payment transactions in MOCAS was for adjustments to previously recorded payments—$49 billion of adjustments out of $198 billion in disbursement, collection, and adjustment transactions. This is an improvement over fiscal year 1999 when DFAS Columbus data showed that about $1 of every $3 in contract payment transactions (transactions for disbursements, collections, and adjustments) in MOCAS was for adjustments to previously recorded payments—$51 billion of adjustments out of $157 billion in transactions. While DOD has been working on resolving these problems for years, it has yet to correct them.

To research the payment allocation problems and make adjustments to correct the disbursing and accounting records, DFAS Columbus reported that it incurred costs of about $34 million in fiscal year 2002, primarily for hundreds of DOD and contractor staff. This represented about 35 percent of the $97.4 million that DFAS Columbus spent on contract pay service operations. Our review showed that the specific contracting offices that contributed to payment allocation problems resulting in adjustments did not pay for all of the work DFAS Columbus performed to make the adjustments. This occurred because DFAS Columbus currently bills DOD activities (for example, the Army) for contract pay services based solely on the number of lines of accounting on an invoice. Consequently, all DOD activities pay the same line rate, regardless of whether substantial work is needed to reconcile problem contracts and adjust the payment records. As a result, the contracting offices that contributed to payment allocation problems had insufficient incentives to reduce payment errors and associated costs. As discussed later in this report, DOD is taking action to change its billing structure for DOD activities.

Contracts Were Complex Due to Legal and DOD Requirements, Contract Modifications, and Pricing Provisions

Our analysis of an Army and an Air Force contract showed that the contracts and related payment instructions were complex because of a combination of factors, including the (1) legal and DOD requirements to track and report on the funds used to finance the contract, (2) number of modifications made to the contract over the years that added goods and/or services, or added or changed payment instructions for these goods and/or services, and (3) different pricing provisions to pay for goods and services on the contract. While we identified these three factors as unique areas, the factors are interrelated and contributed to the contracts containing complex payment instructions and the difficulty DFAS Columbus had in

properly allocating payment amounts to the correct ACRNs, ultimately contributing to a high rate of adjustments.

Legal and DOD Requirements Contribute to Complex Contracts

In order to maintain administrative control over appropriated funds, DOD has established a system of controls to help ensure that funds obligated and then expended for the procurement of goods and services were used as intended and in accordance with applicable laws and regulations. A system of controls should be designed to help ensure that agencies do not obligate or expend more funds than available. However, DOD's system contributes to the complexity of the contracts.

To report on the status of its appropriated funds—including amounts obligated and expended—DOD uses a line of accounting to accumulate appropriation, budget, and management information. For all contracts, the contracting office assigns a two-digit ACRN to each line containing unique accounting information in accordance with the requirements contained in DFARS 204.7107 (c). DFAS Columbus allocates payments to the ACRNs to match contract payments to the corresponding obligations.

For the two contracts that we reviewed, the Army contract that was valued at $565 million contained 74 separate ACRNs funded by 8 different appropriation accounts and sales to three foreign countries, and the Air Force contract that was valued at $49 million contained 89 ACRNs funded by 23 different appropriation accounts. Each ACRN was established to comply with the DFARS requirement for a separate ACRN for each unique line of accounting. The information on the line of accounting (1) is needed to track the obligations and disbursements back to the DOD activity authorizing the work and (2) provides information on the obligations and disbursement data, such as the organizations providing the funding. While DOD created all of these ACRNs to comply with its requirements, our analysis of the lines of accounting showed that DOD used ACRNs to provide the information needed to comply with legal requirements to

account for obligations by appropriation account[7] and by object class.[8] On the Army contract that contained 74 ACRNs, 24 of these ACRNs—about one-third—were used by DOD to provide the information needed to satisfy the legal requirements. Likewise, on the Air Force contract that contained 89 ACRNs, 48 of these ACRNs—or more than half—were used by DOD to provide the information needed to satisfy the legal requirements. DOD accounts for each of these ACRNs separately—in effect treating them as separate bank accounts—even though they all fund the same contract. Each additional ACRN increases the risk of incorrectly allocating payments to the wrong ACRN.

Frequent Contract Modifications Contribute to Complex Contracts

While accounting requirements and related ACRNs contributed to complex contracts, frequent contract modifications to procure additional goods and services are another factor that contributed to complex contracts. When DOD orders more goods and/or services than provided on the original contract, DOD modifies the contract and pays the contractor for the additional goods and/or services. Many times different appropriation accounts are used to pay for these additional goods and/or services resulting in DOD creating more ACRNs to account for the funds. Our analysis of two DOD contracts showed that they were modified many times over the years to procure additional goods and/or services, as well as to add or change payment instructions. Our review found that modifications that changed payment instructions resulted in DFAS Columbus making adjustments to correct prior payment allocations to ACRNs.

- In 1997, the Army contracted with Lockheed Martin Vought Systems Corporation to produce an updated version of the Army Tactical Missile System. The basic contract was for the procurement of 100 guided

[7]Several statutes and implementing regulatory requirements established by the Secretary of the Treasury (Treasury) and the Office of Management and Budget (OMB) require the reporting of contractual obligations, properly recorded as prescribed by 31 U.S.C. Section 1501, and related disbursements. Principal among these are the content requirements for agencies' annual budget submission and budget execution reports, 31 U.S.C. Sections 1108c and 1554, respectively, and the Treasury and OMB accounting system and financial reporting requirements that implement 31 U.S.C. Sections 1511 to 1514.

[8]Object classes present information on obligations by the items or services purchased by the federal government. Object classes include personnel compensation and benefits, contractual services and supplies, and acquisition of assets. The President's budget is required by 31 U.S.C. Section 1104(b) to present obligations by object class for each account, and OMB requires agencies to report on these object classes.

missiles and launching assemblies for the Army missile program. The Army program office initially obligated $14.2 million in 1997 for this effort. As of September 30, 2002, the estimated contract value increased to almost $565 million. Our analysis of this contract showed that it was modified 122 times over a 5-year period to (1) increase the number and type of missile systems ordered for the Army and three foreign countries from 100 to 833, (2) procure over 270,000 engineering service hours to support the production of the missile systems, and (3) make other changes necessary to administer the contract. The Army contracting office also issued six modifications to provide detailed payment instructions to DFAS Columbus. According to the Administrative Contracting Officer, the payment instructions were issued to resolve payment allocation errors made by DFAS Columbus and to ensure that the payments were applied to the correct ACRNs on the contract.

- Like the Army contract, the Air Force contract was also modified a number of times to procure additional goods and services and to administer the contract. In October 1999, the Air Force contracted with L-3 Communications to maintain the Army portion of the Army Data Link System. The basic contract contained a description of the engineering and technical services and spare parts necessary to maintain the communications system worldwide. The contract also stated that funding for the engineering and technical services as well as miscellaneous spare parts would be included on individual funding modifications on this contract. As of September 30, 2002, the estimated contract value was about $49 million. Our analysis of this contract showed that it was modified 82 times over a 3-year period by five different procurement contracting officers to (1) provide funding for and/or increase/decrease the requirements for engineering and technical services and miscellaneous spare parts to maintain the Army assets for the Army Data Link System and (2) make other changes necessary to administer the contract. Furthermore, 73 of the 82 modifications revised the payment instructions.

Contract Pricing Provisions Contribute to Complex Contracts

Our analysis of two DOD contracts showed that contract-pricing provisions were a third factor that contributed to the complexity of these contracts. As stated previously, the Army and Air Force contracting offices issued many contract modifications to procure goods and services on behalf of the military services. These modifications included several contract line items that contained numerous goods or services with different pricing provisions. Contract pricing provisions can be placed into two broad categories—fixed price or cost reimbursable. For example, the Army contract contained firm-fixed-price provisions[9] for procuring 833 missiles, and cost-plus-fixed-fee[10] and cost-plus-award-fee[11] provisions for procuring 270,000 engineering service hours to support the missile production.

Our review found that contracts containing different pricing provisions are more complex, and thus it is more difficult to properly allocate payments to the correct ACRNs because DFAS Columbus voucher examiners must allocate payment amounts manually, resulting in a greater opportunity for error. When DFAS Columbus voucher examiners manually allocate payment amounts to contract ACRNs, the voucher examiners must ensure that the payment amounts associated with fixed price and cost reimbursable provisions are allocated to those ACRNs funding those payment provisions only. However, in some cases it is difficult for the voucher examiner to readily identify these ACRNs without performing a labor-intensive review of the contract. As a result, sometimes the voucher examiner incorrectly applies the payment amounts to ACRNs funding fixed price provisions instead of ACRNs funding cost reimbursable provisions. Our review of the Army contract found that it contained 25 separate contract line items—15 were to be paid for under fixed price provisions

[9]A firm-fixed-price contract provides for a price that is not subject to any adjustment on the basis of the contractor's cost experience in performing the contract. This contract type places the maximum risk and full responsibility for all costs and resulting profit or loss on the contractor.

[10]A cost-plus-fixed-fee contract is a cost reimbursement contract that provides for payment to the contractor of (1) allowable incurred cost, to the extent prescribed in the contract, and (2) a negotiated fee that is fixed at the inception of the contract. The fee does not vary with actual cost, but may be adjusted as a result of changes in the work to be performed under the contract.

[11]A cost-plus-award-fee contract is a cost reimbursement contract that provides for a fee consisting of (1) allowable incurred cost, to the extent prescribed in the contract, (2) a base amount fixed at inception of the contract, and (3) an award amount, based on the judgmental evaluation by the government, sufficient to provide motivation for excellence in contract performance.

and 10 were to be paid for under cost reimbursable provisions. Similarly, the Air Force contract contained 66 separate contract line items—16 were to be paid for under fixed price provisions and 50 were to be paid for under cost reimbursable provisions.

Reasons for DFAS Columbus Making $160 Million of Adjustments to Correct Prior Payment Allocations

As stated previously, the Army and Air Force contracts that we reviewed were complex due to a number of factors, including legal and DOD requirements, contract modifications, and pricing provisions. These factors contributed to the difficulty DFAS Columbus had in properly allocating payment amounts to the correct ACRNs. As a result, payment amounts on these contracts were not allocated to the correct ACRNs, and DFAS Columbus made substantial adjustments to correct the payment allocations. Our evaluation of $160 million of adjustments showed that DFAS Columbus made these adjustments to reallocate payments to the correct ACRNs. Table 1 summarizes the reasons for the adjustments and provides the number and dollar amount of adjustment transactions made to reallocate payments to the correct ACRNs.

Table 1: Reasons for $160 Million in Contract Payment Adjustments for Two Contracts

Reasons for the adjustments	Number of adjustment transactions	Dollar value of adjustments (dollars in millions)
Army contract writing system error in accounting for contract obligations.	92	$127.2
Procedures and regulations for an Army contract containing multiple pricing provisions were not followed.	88	4.7
Complex and changing payment instructions for the Army contract.	16	2.4
Frequent contract modifications to change payment instructions for the Air Force contract.	1,262	26.1
Total	**1,458**	**$160.4**

Source: GAO.

An Army Contract Writing System Error in Accounting for Contract Obligations

From 1998 through 2001, DFAS Columbus paid 43 invoices totaling $63.5 million for the procurement of several missile systems. DFAS allocated these payment amounts to two ACRNs according to the payment instructions in effect at the time of the payment. Subsequently, the contractor submitted price reductions to the Army for certain contract items that DFAS Columbus had previously paid. In response to the price reductions, the Army issued a contract modification to account for the reductions. When the Army processed this modification, the Army contract writing system incorrectly deobligated the amount for the missiles on the two ACRNs in error and established two new ACRNs on the contract containing the reduced amount. As a result, in January 2002, DFAS Columbus processed 92 adjustment transactions totaling about $127.2 million to move payment amounts to the new ACRNs. In discussing this problem with Army officials, they informed us that they did not know that the system error resulted in DFAS Columbus having to do additional work to make these adjustments. According to these officials, the system problem that resulted in the creation of the new ACRNs was corrected in 2001.

Procedures and Regulations for an Army Contract Containing Multiple Pricing Provisions Were Not Followed

From June 1999 through April 2001, DFAS Columbus paid 38 invoices totaling about $16 million for engineering services on the Army contract. When DFAS Columbus paid the contractor, the contract did not contain specific payment instructions on how to allocate payment amounts to ACRNs as required by DFARS 204.7107 (e)(3)(i). According to this regulation, when a contract line item is funded by multiple ACRNs, the contracting officer shall provide adequate instructions in the contract to permit the paying office (DFAS Columbus in this case) to accurately charge the ACRNs assigned to that contract line item. Without these payment instructions, DFAS Columbus voucher examiners should follow DFAS Columbus internal procedures.[12] These procedures require voucher examiners to prorate payment amounts across all available ACRNs under cost reimbursable provisions when the contract or contractor's invoice does not provide specific payment instructions on which ACRNs should be charged. However, instead of charging ACRNs funding cost reimbursable provisions only (engineering services), DFAS Columbus voucher examiners manually allocated the payment amounts to ACRNs that funded both engineering services (cost reimbursable provisions) and missiles

[12]DFAS Columbus Contract Entitlement, Desk Procedure 401, June 1996.

(fixed price provisions). As a result, some payment amounts for engineering services were incorrectly allocated to ACRNs funding the procurement of missiles.

According to Army contracting officials, in April 2001—almost 2 years after DFAS Columbus paid the first invoice—the Army issued a modification containing detailed payment instructions once it became aware that DFAS was having difficulty in allocating payment amounts to the correct ACRNs. These instructions were different from the payment allocation procedures followed by DFAS Columbus. However, by that time, DFAS Columbus had made 38 payments to the contractor for engineering services and allocated these payments to several ACRNs. To correct payment allocation problems associated with 7 of the previous 38 payments, DFAS Columbus processed 88 adjustment transactions totaling about $4.7 million to reallocate previously recorded payments according to the new instructions.

Complex and Changing Payment Instructions for the Army Contract

DFAS Columbus also processed 16 transactions totaling about $2.4 million in adjustments to correct payment errors made by DFAS Columbus voucher examiners when they manually applied payment amounts to ACRNs on the Army contract. In April 2001, the Army issued a contract modification that provided specific payment instructions to ensure that funds were used prior to cancellation. DFAS Columbus officials told us that these payment instructions were complex and changed several times after the modification was first issued. For example, the following instructions were included in contract modifications to provide payment instructions for contract line item number (CLIN)[13] 0030.

- Contract modification 74 dated April 2001 stated that, "Subclins under CLIN 0030 – prorate across ACRNs BR, BS, and BT."

- Seven months later, in November 2001, contract modification 89 added additional payment terms for CLIN 0030 by incorporating instructions for CLIN 0031 and instructions for contract award fees under these two CLINs. The modification stated, "Subclins under CLIN 0030/0031 – prorate across ACRNs BR, BS, BT, BX, BY, and CD, unless voucher identifies award fee then prorate across ACRNs CE, CF, CG, and CH."

[13]According to DFARS 204.7103-1, contracts shall identify the items or services to be acquired as separate contract line items.

- Seven months later, in June 2002, contract modification 109 provided more payment instructions for CLIN 0030/0031. The modification noted that, "Subclins under CLIN 0030/0031 – prorate across ACRNs BR, BS, BT, BX, CD, CN, CT, CU, CW and DA, unless voucher identifies award fee then prorate across ACRNs CE, CF, CG, CH and CV, or if voucher identifies technical publications then prorate across ACRNs BY, CR, and DA."

Our analysis of the payment instructions showed that the instructions were complex, changed several times, and were difficult to administer properly. We found that $2.4 million of adjustment transactions were the result of errors made by voucher examiners. These errors occurred because the examiners did not follow the complex, frequently changed, and nonstandard payment instructions correctly. In order for DFAS Columbus to properly allocate payments on CLIN 0030, our work showed that the voucher examiner must (1) identify the current modification in effect at the time of payment to ensure payments are allocated in accordance with the payment instructions, (2) determine the type of invoice to ensure the allocations are made against the correct ACRNs, for example, technical publications or award fee, (3) identify the current available balance associated with ACRNs funding the services, and (4) calculate a prorated balance to be distributed to each ACRN funding the services. For example, for one invoice totaling $350,635 on the Army contract, DFAS Columbus paid two contract line items and allocated the payment amounts to 23 ACRNs in an attempt to comply with the payment instructions on the contract that were in effect on the payment date. This condition resulted in errors in the contract records when voucher examiners incorrectly allocated payment amounts to the wrong ACRNs.

In discussing this problem with DFAS Columbus officials, they confirmed our analysis that the payment instructions were complex and difficult to administer properly. The officials stated that when a contract contains payment instructions similar to the instructions presented above, DFAS Columbus voucher examiners must manually allocate the payment amounts to contract ACRNs. The officials also stated that the instructions on this contract were very complicated and could easily be misinterpreted if voucher examiners do not carefully review the payment instructions prior to allocating the payment amount to ACRNs on the contract.

Frequent Contract Modifications to Change Payment Instructions for Air Force Contract

In March 2001, DFAS Columbus processed 1,262 transactions totaling over $26 million to adjust previously recorded payment allocations on the Air Force contract. At the time these adjustments were made, the Air Force had already issued 42 modifications, which changed the payment percentages that DFAS Columbus was required to follow to make correct payment allocations. Because the number and frequency of the payment percentages changed, DFAS Columbus did not allocate payment amounts to the correct ACRNs in many cases.

The Air Force awarded a contract in October 1999 to procure engineering and technical services and spare parts to maintain the Army Data Link System. Over the next 3 years, the contract was modified numerous times to increase the requirements for engineering and technical services and spare parts, along with the necessary incremental funding amounts to support these requirements. As additional funds were added to the contract, (1) new ACRNs were added or obligation balances for existing ACRNs increased and (2) the payment percentages were modified to reflect the new obligation balances of the affected ACRNs. For example, the Air Force modified contract line item number 0006 for engineering services three times over a 2-month period to incrementally fund these services. Each time, the Air Force changed the ACRN payment percentages funding the contract line item.

Our analysis of the contract showed that allocating payments on this contract has been very difficult, and voucher examiners could easily misinterpret the payment instructions because of the numerous contract modifications that changed ACRN payment percentages. These instructions were complex and difficult to administer because (1) modifications frequently changed the payment instructions and (2) many ACRNs were financing numerous contract line items. The percentages changed so frequently that DFAS Columbus voucher examiners could not keep track of ACRN balances in order to allocate payment percentages properly. Also, when many ACRNs financed numerous contract line items, DFAS Columbus had difficulty identifying how much of an ACRN's obligation amount related to each line item. Therefore, many payments were not allocated in accordance with the current modification, and adjustments were needed to correct these allocations. Figure 5 illustrates the current funding structure for 3 of the 66 contract line items on the Air Force contract.

Figure 5: Contract Funding Structure for Three Contract Line Items on the Air Force Contract

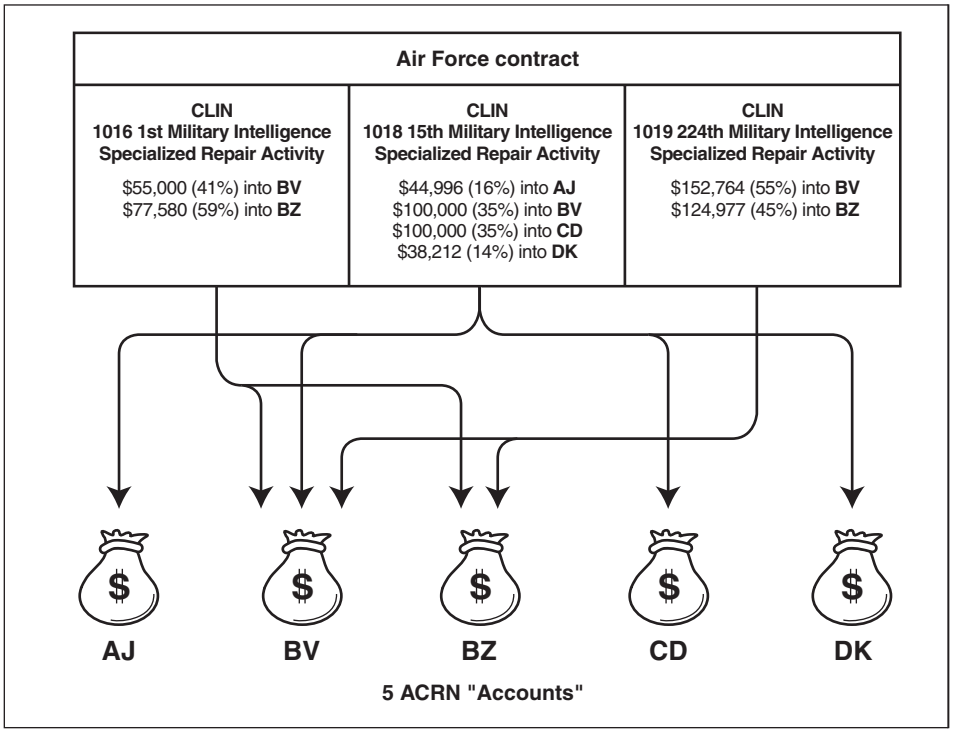

Source: GAO illustration of contract funding structure contained in Air Force contract modification P00073.

As shown above, the relationship of CLINs to ACRNs is complex because there is not a one-to-one relationship. This makes it difficult for DFAS Columbus to accurately allocate payments to ACRNs. Because the contract funding structure was complex, DFAS Columbus voucher examiners did not properly allocate payments to the correct ACRNs. Thus, DFAS Columbus sent the contractor's invoices to its contract reconciliation branch for payment. In addition, beginning in the fall of 2001, the contractor began providing a detailed payment distribution schedule with each invoice submitted to DFAS Columbus to assist it in properly allocating payments to the correct ACRNs. We found that an invoice totaling $94,237.18 contained 31 pages of contractor costs and billing charges for 45 contract line items charging 56 different ACRNs. The amounts charged to the ACRNs by the contractor were as little as $.59 to as much as $88,107.03.

DOD Initiatives to Address Payment Allocation Problems

DOD officials acknowledged that there have been long-standing contract payment allocation problems that have required DFAS Columbus to undertake time-consuming and costly reconciliations to correct allocation errors. DOD has initiated a major long-term effort to develop and implement an enterprise architecture, which is intended to improve its business operations, including its acquisition and disbursement activities. If implemented successfully, this initiative may help correct many of the contract payment allocation problems. In the interim, DOD has several initiatives under way to address the payment allocation problems caused by complex contracts with confusing payment instructions. First, DFAS plans to bill reconciliation costs to contracting offices that contribute to payment allocation problems. Second, DFAS Columbus is briefing the DOD acquisition community on methods for presenting payment instructions in contracts. Finally, a DOD working group is examining payment allocation problems and plans to develop and implement payment allocation options for presenting standard payment instructions on contracts DOD-wide to address these problems.

System Improvement Initiatives

Since 1995, DOD had been attempting to develop a new system—DPPS—to replace MOCAS, which was developed in the 1960s. DPPS was being designed to resolve DOD's long-standing disbursement problems, streamline contract and vendor payment processes, and reduce manual interventions. However as we previously reported,[14] DOD terminated DPPS in December 2002, after 7 years in development at a cost of over $126 million, because of poor program performance and increasing life cycle costs. DOD officials informed us that enhancements to MOCAS are now being considered to provide some of the automated capabilities that DPPS had been attempting to achieve.

[14]U.S. General Accounting Office, *DOD Business Systems Modernization: Continued Investment in Key Accounting Systems Needs to be Justified*, GAO-03-465 (Washington, D.C.: Mar. 28, 2003).

The failure of DPPS to become DOD's standard procurement payment system is indicative of DOD's long-standing inability to efficiently and effectively modernize its financial management and business systems. For example, we recently reported[15] that over $300 million has been invested to develop several DFAS financial management systems and that DOD has not demonstrated that this investment will substantially improve the financial management information needed for decision-making and financial reporting purposes. To help avoid this type of result, we recommended in 2001 that DOD develop and implement an enterprise architecture, an essential modernization management tool.[16]

As part of its current effort to transform its business operations, DOD is developing a business enterprise architecture. A key area of focus is DOD's acquisition and disbursement activities. As we have previously reported, DOD contract management has been a high-risk area within the department since 1992.[17] To address these problems, DOD's business enterprise architecture development effort is intended to (1) incorporate federal accounting and financial management requirements, (2) consider leading practices in procurement and contract payments, and (3) reengineer its business processes. If implemented as planned, this initiative has the potential to address many of the contract payment allocation problems discussed in this report. However, this is a long-term effort that will take many years to implement.

DFAS Plans to Bill Contracting Offices That Contribute to Payment Allocation Problems

As pointed out earlier, the contracting offices that contributed to payment allocation problems have insufficient incentives to structure their contracts, including payment instructions, in a manner that would reduce payment errors and related reconciliation costs. This condition exists because DFAS Columbus currently bills DOD activities (for example, the Army) for contract pay services based solely on the number of lines of accounting on an invoice. DFAS Columbus officials recognized this shortcoming in establishing their billing rates and have informed us that

[15]GAO-03-465.

[16]U.S. General Accounting Office, *Information Technology: Architecture Needed to Guide Modernization of DOD's Financial Operations*, GAO-01-525 (Washington, D.C.: May 17, 2001).

[17]U.S. General Accounting Office, *High-Risk Series: An Update*, GAO-03-119 (Washington, D.C.: January 2003).

they plan to use a separate billing rate, based on DFAS contract reconciliation costs, to bill customers for reconciling, adjusting, and correcting contract payments beginning in fiscal year 2004. According to the officials, the direct billing hour rate for reconciliation services will be $74.55 in fiscal year 2004 and will be billed to the contracting offices responsible for writing the contracts that require reconciliation. According to the Deputy Director of DFAS Columbus's Commercial Pay Services, separately billing contracting offices for the reconciliation work should provide an incentive to those offices to reduce the number of payment allocation problems that result in adjustments. In our view, this billing initiative should encourage contracting offices to structure contracts, including payment instructions, in a manner that should help reduce payment errors and reconciliation costs.

DFAS Columbus Briefs DOD Acquisition Community on Contract Administration, Payment, and Closeout Issues

DFAS Columbus, in partnership with the Defense Contract Management Agency, is providing formal briefings to the DOD acquisition community on various issues related to contract administration, payment, and closeout. These briefings are designed to give contracting, procurement, and budget personnel throughout DOD better insight into the contract entitlement, payment, and accounting processes provided by DFAS Columbus. They also help to promote teamwork between DFAS Columbus and the acquisition community and provide an opportunity to enhance the communications link that is necessary for these organizations to interoperate efficiently and effectively. These briefings began in November 2001 and have been provided to numerous activities across the military services. As of March 2003, presentations had been provided to 18 major acquisition organizations, such as the Army Aviation and Missile Command, the Navy Space and Naval Warfare Systems Command, and the Air Force Space and Missile Systems Center.

Among the topics included in these briefings are methods for correctly presenting payment instructions in contracts. The briefing materials emphasize that payment instructions provide a method for assigning payments to the appropriate ACRNs, based on anticipated work performance. Specifically, the materials discuss payment instruction requirements for fixed price and cost reimbursement contracts and provide recommendations for contracting officers to consider when they develop payment instructions. Reference materials that provide additional payment instruction information, available on the Internet, are also cited in these briefings.

DOD Working Group Examines Payment Instruction Problems

In September 2002, DOD formed a working group[18] to review contract payment instructions. The working group's results were incorporated into a broader DOD initiative to identify needed improvements and reductions to procurement policies, procedures, and processes in DFARS. The working group completed the first phase of its work by researching the types of payment instructions that have caused payment allocation problems and developing proposed changes to DFARS. The working group concluded that payment allocation errors at DFAS Columbus (1) were often the result of problems experienced with confusing payment instructions and (2) were further compounded because DOD did not have payment allocation options for including standard contract payment instructions for use on DOD contracts. As illustrated earlier in this report, payment instructions can be unique to each contract. For example, DFAS Columbus made $2.4 million in payment allocation errors on the Army contract because the voucher examiners made errors when they manually applied payment amounts to ACRNs following complex, nonstandard payment instructions that changed several times. This makes it difficult for DFAS Columbus personnel—who must process the payments and make the adjustments manually—to properly allocate the payments to the correct ACRNs.

In the second phase of this effort, the working group developed proposals for regulatory changes to address the types of standard payment instructions applicable to specific contracting situations. Depending on their specific requirements, contracting officers would be able to choose a contracting option that would include the standard payment instructions applicable to that particular situation. For example, the working group is evaluating several different standard payment instructions that DOD contracting offices may use on contracts, including standard payment instructions (1) for ensuring that funds are used before they are no longer available for expenditure and (2) for ensuring that funds can be allocated to the various contract ACRNs based on the balance available on each contract ACRN. The group's consensus was that such standardization should enable DFAS Columbus to substantially increase its level of automated payments.

[18]The working group consists of representatives from the Offices of the Under Secretary of Defense (Comptroller) and the Under Secretary of Defense (Acquisition, Technology, and Logistics), DFAS Columbus, and the Defense Contract Management Agency.

During phase three, the final phase that began in May 2003, the working group's proposals will be presented to the Defense Acquisition Regulations Council[19] and other experts for review. The results from this review process will eventually determine whether the working group's proposals will be accepted. DOD has not yet established a milestone date for completing the third phase of this effort and has not yet made the final decision to implement the options for presenting standard payment instructions. While the working group did not study the possibility of automating the standard payment instructions, it informed us that automating them would be the next logical step if they were implemented.

Our analysis of the working group initiative to develop standard payment instructions showed that it is a good first step because it should reduce some of the payment allocation errors that were the result of DFAS Columbus voucher examiners misinterpreting contract payment instructions. However, even with the standard payment instructions, DFAS Columbus will still manually allocate payments to contract ACRNs on complex contracts such as the two mentioned in this report. As we previously stated, manual payment allocations increase the opportunity for errors. In order to eliminate payment allocation errors, DFAS should take the next step and automate the standard payment instructions so that DFAS Columbus can electronically process the payments with minimal manual intervention.

Conclusions

Resolving DOD's long-standing contract payment problems will require major improvements to its processes and systems. One key element of DOD's efforts to improve its business operations is its effort to develop an enterprise architecture to guide and constrain its ongoing and planned investments in business systems. Another key element to resolving contract payment problems would be to determine whether DOD can reengineer the way its contracts are written, including the length of time covered by a contract as well as the number of modifications made to the contract. If successful, these efforts could result in reengineered business processes and financial management systems that could address many of DOD's long-standing contract payment allocation problems that have required DFAS Columbus to undertake time-consuming and costly

[19]Pursuant to DOD Instruction 5000.63, subject: Defense Acquisition Regulations System, July 31, 2002, the Defense Acquisition Regulations Council is responsible for developing fully coordinated recommendations for revisions to the FAR and the DFARS.

reconciliations to correct allocation errors. However, these reengineered processes and systems are years from becoming reality.

In the interim, DOD is addressing some of the fundamental weaknesses that have resulted in billions of dollars of adjustments to correct contract payment allocations annually. However, DOD has not yet completed its work to (1) provide information to the procuring activities on the correct methods for presenting payment instructions on contracts, (2) develop and implement standardized payment instructions to be used DOD-wide, and (3) fully automate the payment process using these instructions. Without standardized and automated payment instructions, DOD will continue to spend millions of dollars each year to process payments manually and then adjust those payments. Further, DOD activities must follow existing regulations and procedures covering payment instructions to help ensure that payment data are accurately recorded against the correct obligations. Until DOD successfully modernizes its business operations, these interim steps will help avoid the inaccurate contract payment data that have hindered DOD's ability to accurately account for and report on contract disbursements.

Recommendations for Executive Action

We recommend that the Secretary of Defense direct the Under Secretary of Defense (Acquisition, Technology, and Logistics) to

- develop payment allocation options for presenting standard payment instructions in contracts containing multifunded contract line items and
- issue guidance to the contracting community reiterating the requirement in DFARS that all contracts containing multifunded contract line items contain payment instructions and that these instructions be revised when additional ACRNs are added.

We also recommend that the Secretary of Defense direct the Under Secretary of Defense (Comptroller) to direct the Director of the Defense Finance and Accounting Service to

- automate the standardized payment instructions in MOCAS once the standard payment instructions are adopted and
- issue guidance reiterating DFAS's internal requirement that when a contract does not contain payment instructions and the contractor invoice does not contain payment instructions, the payments for costs

and services must be allocated to ACRNs financed on a cost reimbursable basis in accordance with DFAS's desk procedures.

Agency Comments and Our Evaluation

DOD provided written comments on a draft of this report. In its comments, DOD concurred with two of the four recommendations and partially concurred with the remaining two recommendations. DOD's comments are reprinted in appendix II.

For the two recommendations with which it concurred, DOD stated that the department will issue memorandums to (1) contracting personnel reiterating the requirements contained in DFARS and (2) DFAS personnel to adhere to DFAS policies and procedures, especially as they relate to the lack of definitive payment instructions in the contractual documents.

Regarding the two partial concurrences, DOD stated that it would establish a standard section of the contract for placement of payment provisions, which would include any payment allocation provisions. In addition, DOD agreed that it would, as part of the working group effort referred to in this report, evaluate the feasibility of developing and automating payment allocation options to include in standard payment instructions. However, until the coordination and review process within DOD is complete, DOD stated that it could not commit to the development and automation of standard payment instructions.

We understand that actions to develop and automate standard payment instructions must be coordinated with interested parties throughout DOD. At the same time, a clear commitment to completing this effort in a timely manner is critical if DOD is to resolve its long-standing problem of spending tens of millions of dollars each year to make tens of billions of dollars in adjustments to correct the payment allocation problems. When $1 out of every $4 in contract payment transactions continues to be for adjustments to previously recorded payments, decisive steps towards a lasting solution are essential. One concern that we have is that DOD has not indicated any time frame for completing the coordination and review process referred to in its response. As we recently testified,[20] cultural resistance to change, military service parochialism, and stovepiped

[20]U.S. General Accounting Office, *Department of Defense: Status of Financial Management Weaknesses and Progress Toward Reform*, GAO-03-931T (Washington, D.C.: June 25, 2003).

operations have played a significant role in previous failed attempts to implement management reforms at DOD. Breaking down these barriers will be critical to successfully reforming DOD's contract payment processes and saving the millions of dollars currently spent annually on inefficient and inaccurate manual processes.

In addition, DOD stated that our findings were based on a review of only two contracts that had known problems. DOD recommended that the report specifically state that, due to the nature of this review, the results cannot be extrapolated to other DOD contracts. The draft report already included such a statement. The report states that the two contracts we reviewed are not representative of all DOD contracts but, based on our experience, have characteristics similar to other complex contracts. DFAS Columbus provided these contracts as examples of complex contracts with which they had encountered problems in correctly allocating payments to ACRNs. We selected these two contracts so we could identify the root cause of payments not being properly allocated to ACRNs and to determine what actions DOD is taking to address the problem. We believe that the two contracts provide a good perspective regarding the types of serious problems that have long plagued DOD's contract payment process.

As agreed with your office, unless you publicly announce its contents earlier, we plan no further distribution of this report until 30 days from its date. At that time, we will send copies of the report to interested congressional committees. We will also send copies of this report to the Secretary of Defense; the Under Secretary of Defense (Comptroller); the Under Secretary of Defense (Acquisition, Technology, and Logistics); the Secretaries of the Army, Navy, and Air Force; and the Director of the Defense Finance and Accounting Service. We will make copies available to others upon request. In addition, the report will be available at no charge on the GAO Web site at http://www.gao.gov. If you or your staff have any questions regarding this report, please contact me at (202) 512-9505 or kutzg@gao.gov or Greg E. Pugnetti, Assistant Director, at (703) 695-6922 or

pugnettig@gao.gov. Major contributors to this report are acknowledged in appendix III.

Sincerely yours,

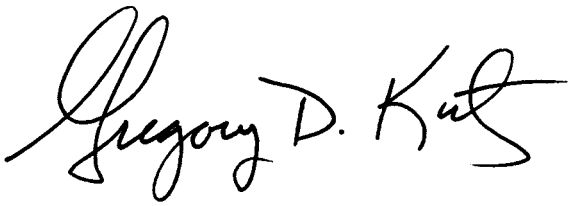

Gregory D. Kutz
Director, Financial Management and Assurance

Scope and Methodology

To determine the magnitude of adjustments that affected previously recorded payments and Defense Finance and Accounting Service (DFAS) Columbus's reported cost to make these adjustments in fiscal year 2002, we obtained and analyzed a Mechanization of Contract Administration Services (MOCAS) database of contract payment transactions, including disbursements, collections, and adjustments, made for fiscal year 2002. We then determined the dollar amount and percentage of those adjustments that were made to previously recorded payments. We also interviewed and obtained cost information from DFAS officials to determine the costs for the DFAS Columbus commercial pay services, including the cost incurred by DFAS Columbus to make adjustments to previously recorded payments.

To determine why contracts, including payment instructions, were complex, we reviewed applicable laws, Department of Defense (DOD) memorandums, regulations, administrative guidelines, policies, and procedures governing contract payments. These included a review of the key contract payment provisions provided in the Defense Federal Acquisition Regulation, DOD acquisition guidance, and DFAS policies. We also requested that DFAS Columbus provide us with several contracts that created problems for DFAS Columbus technicians when recording payments. DFAS Columbus officials provided us with 10 contracts that contained problems that DFAS Columbus was having with properly allocating payments to accounting classification reference numbers (ACRN), such as (1) missing payment instructions, (2) complex payment instructions, or (3) the contracting office changing payment instructions. Based on our review of contract documentation and interviews with DFAS Columbus officials, we selected two contracts for a detailed review to determine why the contracts, including payment instructions, were complex and caused payment allocation problems.

The two contracts selected were an Army missile contract (contract number DAAH01-98-C-0093) and an Air Force communications contract (contract number F09604-00-C-0090). In selecting these two contracts, we considered several factors, including (1) goods and/or services purchased, (2) the dollar amount of obligations and disbursements made on the contract, (3) the number of modifications made to the contract, (4) the number of ACRNs financing the contract, (5) payment provisions on the contract, and (6) the number of contract reconciliations performed by DFAS Columbus. Because contract data were constantly changing, we used a cutoff point of September 30, 2002, to gather, review, and analyze data on the two contracts.

To determine the key factors that caused DFAS Columbus to make payment adjustments for the two contracts reviewed, we obtained the contracts, purchase requests, contract modifications, vouchers, invoices, and other contract documentation. We reviewed this information and analyzed in detail (1) the payment instructions contained in the contract and contract modifications, (2) the purpose for and the number of ACRNs funding the contract, and (3) the number, dollar amount, and reasons for adjustments on the contracts. To determine why these adjustments were necessary, we analyzed 2 of the 67 reconciliations performed by DFAS Columbus (1 review for each contract), which resulted in $160 million of the $264 million in adjustments.

Finally, to determine what steps DOD has taken or planned to address the adjustment problem, we (1) reviewed applicable DOD policies to identify changes in payment instruction guidance, (2) interviewed DFAS officials responsible for system development projects that affected MOCAS payments, and (3) interviewed DFAS officials on a working group formed to improve payment instructions. In addition, we discussed with officials from DFAS and the Office of the Under Secretary of Defense (Acquisition, Technology, and Logistics) why the contract payment instructions were so complex, whether they needed to be so complex, and what the officials were doing to address this problem.

We performed our review at the headquarters Offices of the Under Secretary of Defense (Comptroller) and the Under Secretary of Defense (Acquisition, Technology, and Logistics), Washington D.C., and DFAS, Arlington, Virginia; DFAS, Columbus, Ohio; Army Aviation and Missile Command, Redstone Arsenal, Alabama; and Air Force Materiel Command, Robins Air Force Base, Georgia. Our review was performed from August 2002 through July 2003 in accordance with U.S. generally accepted government auditing standards, except that we did not validate the accuracy of (1) DFAS Columbus disbursement data pertaining to the dollar amount and percentage of those adjustments that were made to previously recorded payments and (2) the cost incurred to reconcile DFAS Columbus contracts. We also did not review the DOD acquisition process, including how contracts are written. We did analyze the payment instructions in the two contracts that we reviewed. We requested comments on a draft of this report from the Secretary of Defense or his designee. DOD provided written comments on July 3, 2003, which are discussed in the “Agency Comments and Our Evaluation” section of this report and are reprinted in appendix II.

Comments from the Department of Defense

OFFICE OF THE UNDER SECRETARY OF DEFENSE
3000 DEFENSE PENTAGON
WASHINGTON, DC 20301-3000

ACQUISITION,
TECHNOLOGY
AND LOGISTICS

JUL 3 2003

DPAP/P

Mr. Gregory D. Kutz
Director, Financial Management
and Assurance
U. S. General Accounting Office
Washington, DC 20548

Dear Mr. Kutz:

This is the Department of Defense (DoD) response to the GAO draft report, "DOD CONTRACT PAYMENTS: Management Action Needed to Reduce Billions in Adjustments to Contract Payment Records, dated June 4, 2003 (GAO Code 192069/GAO-03-727)."

A general comment is that the findings contained in the enclosed report address only two contracts. In addition, these two contracts were selected because it was known they had significant problems. We recommend that the report specifically state that, due to the nature of this review, the results cannot be extrapolated to other DoD contracts.

My comments on the recommendations are enclosed. Thank you for the opportunity to comment on the subject draft report. My point of contact is Mr. David Capitano at 703-847-748 or david.capitano@osd.mil.

Sincerely,

Col Lyndi Baker

for Deidre A. Lee
Director, Defense Procurement and
Acquisition Policy

Enclosure:
As stated

GAO DRAFT REPORT – DATED JUNE 04, 2003
GAO CODE 192069/OSD CASE GAO-03-727

"DOD CONTRACT PAYMENTS: Management Action Needed to Reduce Billions in Adjustments to Contract Payment Records"

DEPARTMENT OF DEFENSE COMMENTS
TO THE RECOMMENDATIONS

****

RECOMMENDATION 1: The GAO recommended that the Secretary of Defense direct the Under Secretary of Defense (Acquisition, Technology, and Logistics) to develop payment allocation options for presenting standard payment instructions in contracts containing multi-funded contract line items.

DOD RESPONSE: Partially Concur. DoD agrees to establish a standard section (e.g., Section G) of the contract for placement of payment provisions, which would include any payment allocation provisions. In addition, DoD will, as part of the effort of the working group referenced in the GAO report, evaluate the feasibility of developing payment allocation options to include in standard payment instructions. However, until the coordination and review process within DoD is complete, DoD cannot commit to the development of such payment options.

RECOMMENDATION 2: The GAO recommended that the Secretary of Defense direct the Under Secretary of Defense (Acquisition, Technology, and Logistics) to issue guidance to the contracting community reiterating the requirement in the Defense Federal Acquisition Regulation supplement that all contracts containing multi-funded contract line items contain payment instructions and that these instructions must be revised when additional accounting classification reference numbers (ACRNs) are subsequently added.

DOD RESPONSE: Concur. DoD will issue a memorandum to contracting personnel reiterating the requirements at DFARS 204.7107(e)(3)(i).

RECOMMENDATION 3: The GAO recommended that the Secretary of Defense direct the Under Secretary of Defense (Comptroller) to direct the Director of the Defense Finance and Accounting Service to automate the standardized payment instructions in the Mechanization of Contract Administration Services (MOCAS) system once the standard payment instructions are adopted.

DOD RESPONSE: Partially Concur. The working group is evaluating the feasibility of automating the standardized payment instructions. However until the coordination and

review process within DoD is complete, DoD cannot commit to the development of automated standardized payment instructions.

RECOMMENDATION 4: The GAO recommended that the Secretary of Defense direct the Under Secretary of Defense (Comptroller) to direct the Director of the Defense Finance and Accounting Service to issue guidance reiterating the Defense Finance and Accounting Service's internal requirement that when a contract does not contain payment instructions and the contractor invoice does not contain payment instructions, the payment for costs and services must be allocated to ACRN's financed on a cost reimbursable basis in accordance with the Defense Finance and Accounting Service desk procedures.

DOD RESPONSE: Concur. A memorandum will be issued by the Deputy Director, Commercial Pay Services, directing adherence to Defense Finance and Accounting Service policies and procedures, especially as relates to the lack of definitive payment instructions in the contractual documents.

GAO Contact and Staff Acknowledgments

GAO Contact

Greg E. Pugnetti, (703) 695-6922

Acknowledgments

Staff members who made key contributions to this report were Francine M. DelVecchio, Francis L. Dymond, Dennis B. Fauber, Keith E. McDaniel, and Harold P. Santarelli.

Related GAO Products

Canceled DOD Appropriations: Improvements Made but More Corrective Actions Are Needed. GAO-02-747. Washington, D.C.: July 31, 2002.

DOD Contract Management: Overpayments Continue and Management and Accounting Issues Remain. GAO-02-635. Washington, D.C.: May 30, 2002.

Canceled DOD Appropriations: $615 Million of Illegal or Otherwise Improper Adjustments. GAO-01-697. Washington, D.C.: July 26, 2001.

Financial Management: Differences in Army and Air Force Disbursing and Accounting Records. GAO/AIMD-00-20. Washington, D.C.: March 7, 2000.

Financial Management: Seven DOD Initiatives That Affect the Contract Payment Process. GAO/AIMD-98-40. Washington, D.C.: January 30, 1998.

Financial Management: Improved Reporting Needed for DOD Problem Disbursements. GAO/AIMD-97-59. Washington, D.C.: May 1, 1997.

Contract Management: Fixing DOD's Payment Problems Is Imperative. GAO/NSIAD-97-37. Washington, D.C.: April 10, 1997.

Financial Management: Status of Defense Efforts to Correct Disbursement Problems. GAO/AIMD-95-7. Washington, D.C.: October 5, 1994.

GAO's Mission

The General Accounting Office, the audit, evaluation and investigative arm of Congress, exists to support Congress in meeting its constitutional responsibilities and to help improve the performance and accountability of the federal government for the American people. GAO examines the use of public funds; evaluates federal programs and policies; and provides analyses, recommendations, and other assistance to help Congress make informed oversight, policy, and funding decisions. GAO's commitment to good government is reflected in its core values of accountability, integrity, and reliability.

Obtaining Copies of GAO Reports and Testimony

The fastest and easiest way to obtain copies of GAO documents at no cost is through the Internet. GAO's Web site (www.gao.gov) contains abstracts and full-text files of current reports and testimony and an expanding archive of older products. The Web site features a search engine to help you locate documents using key words and phrases. You can print these documents in their entirety, including charts and other graphics.

Each day, GAO issues a list of newly released reports, testimony, and correspondence. GAO posts this list, known as "Today's Reports," on its Web site daily. The list contains links to the full-text document files. To have GAO e-mail this list to you every afternoon, go to www.gao.gov and select "Subscribe to e-mail alerts" under the "Order GAO Products" heading.

Order by Mail or Phone

The first copy of each printed report is free. Additional copies are $2 each. A check or money order should be made out to the Superintendent of Documents. GAO also accepts VISA and Mastercard. Orders for 100 or more copies mailed to a single address are discounted 25 percent. Orders should be sent to:

U.S. General Accounting Office
441 G Street NW, Room LM
Washington, D.C. 20548

To order by Phone: Voice: (202) 512-6000
TDD: (202) 512-2537
Fax: (202) 512-6061

To Report Fraud, Waste, and Abuse in Federal Programs

Contact:

Web site: www.gao.gov/fraudnet/fraudnet.htm
E-mail: fraudnet@gao.gov
Automated answering system: (800) 424-5454 or (202) 512-7470

Public Affairs

Jeff Nelligan, Managing Director, NelliganJ@gao.gov (202) 512-4800
U.S. General Accounting Office, 441 G Street NW, Room 7149
Washington, D.C. 20548

PRINTED ON RECYCLED PAPER

United States
General Accounting Office
Washington, D.C. 20548-0001

Official Business
Penalty for Private Use $300

Address Service Requested

Presorted Standard
Postage & Fees Paid
GAO
Permit No. GI00