United States General Accounting Office

GAO

Report to the Chairman, Subcommittee on Energy and Air Quality, Committee on Energy and Commerce, U.S. House of Representatives

July 2003

SPENT NUCLEAR FUEL

Options Exist to Further Enhance Security

GAO

Accountability * Integrity * Reliability

GAO-03-426

July 2003

SPENT NUCLEAR FUEL

Options Exist to Further Enhance Security

GAO Accountability • Integrity • Reliability

Highlights

Highlights of GAO-03-426, a report to the Chairman, Subcommittee on Energy and Air Quality, Committee on Energy and Commerce, U.S. House of Representatives

Why GAO Did This Study

Spent nuclear fuel, the used fuel periodically removed from nuclear power reactors, is one of the most hazardous materials made by man. Nuclear power companies currently store 50,000 tons of spent fuel at 72 sites in 33 states. That amount will increase through 2010, when the Department of Energy (DOE) expects to open a permanent repository for this fuel at Yucca Mountain, Nevada. Concerns have been raised since September 11, 2001, that terrorists might target spent fuel. GAO was asked to (1) review federally sponsored studies that assessed the potential health effects of a terrorist attack or a severe accident on spent fuel, either in transit or in storage, and (2) identify options for DOE to further enhance the security of spent fuel during shipping to Yucca Mountain.

What GAO Recommends

GAO is recommending that, as DOE develops its plans for transporting spent fuel to Yucca Mountain, it assess potential options to further enhance the security and safety of this fuel.

In commenting on GAO's report, DOE and NRC generally concurred with the facts of the report. DOE noted that the information on transit was accurate and well-balanced, while the Nuclear Regulatory Commission (NRC) noted that the information provides a reasonable characterization of the current understanding of risks associated with spent fuel storage.

www.gao.gov/cgi-bin/getrpt?GAO-03-426.

To view the full product, including the scope and methodology, click on the link above. For more information, contact Robin M. Nazarro at (202) 512-3841 or nazarror@gao.gov.

What GAO Found

The likelihood of widespread harm from a terrorist attack or a severe accident involving commercial spent nuclear fuel is low, according to studies conducted by DOE and NRC. Largely because spent fuel is hard to disperse and is stored in protective containers, these studies found that most terrorist or accident scenarios would cause little or no release of spent fuel, with little harm to human health. Some assessments found widespread harm is possible under certain severe but extremely unlikely conditions involving spent fuel stored in storage pools. As part of its ongoing research program and to respond to increased security concerns, NRC has ongoing and planned studies of the safety and security of spent fuel, including the potential effects of more extreme attack scenarios, including deliberate aircraft crashes.

While NRC and DOE have found that spent fuel may be relatively safe and secure, DOE could potentially enhance the security of this fuel through options such as minimizing the number of shipments and picking up fuel in an order that would reduce risk, such as moving older less dangerous fuel first. These options could reduce the risk during transport and at some locations where the fuel is currently stored. However, contractual agreements between DOE and owners of spent fuel may limit DOE's ability to choose among these options. In addition, it is not clear that the benefits of these measures would justify the potential costs, including a possible renegotiation of the contracts between DOE and the spent fuel owners.

Contents

Letter 1

Results in Brief 2
Background 3
Likelihood of Widespread Harm from Terrorist Attacks or Severe Accidents Involving Spent Fuel Is Low 8
Options May Exist to Further Enhance Security and Safety 17
Conclusions 24
Recommendations for Executive Action 24
Agency Comments and Our Evaluation 24
Scope and Methodology 26

Appendix I **Nuclear Regulatory Commission Requirements for Safety and Security of Spent Fuel** 28

Appendix II **Additional Information on Studies on the Safety and Security of Spent Fuel in Transit** 37

Appendix III **Comments from the Department of Energy** 42

Appendix IV **Comments from the Nuclear Regulatory Commission** 43

Appendix V **GAO Contact and Staff Acknowledgments** 45

Table

Table 1: Potential Health Effects of Fire in a Spent Fuel Pool 14

Figures

Figure 1: Locations for Wet and Dry Storage Sites for Commercial Spent Nuclear Fuel and Yucca Mountain, as of April 2003 6
Figure 2: Cutaway Graphic of a Spent Fuel Truck Transportation Cask 29
Figure 3: Spent Fuel Rail Container 30
Figure 4: Spent Fuel Truck Container on a Trailer 30
Figure 5: A Wet Storage Pool 32
Figure 6: A Spent Fuel Dry Storage Container 35

Abbreviations

DOE	Department of Energy
NRC	Nuclear Regulatory Commission

This is a work of the U.S. Government and is not subject to copyright protection in the United States. It may be reproduced and distributed in its entirety without further permission from GAO. It may contain copyrighted graphics, images or other materials. Permission from the copyright holder may be necessary should you wish to reproduce copyrighted materials separately from GAO's product.

G A O
Accountability * Integrity * Reliability

United States General Accounting Office
Washington, DC 20548

July 15, 2003

The Honorable Joe Barton
Chairman, Subcommittee on Energy and Air Quality
Committee on Energy and Commerce
House of Representatives

Dear Mr. Chairman:

One of the most hazardous materials made by man is spent nuclear fuel—the used fuel periodically removed from reactors in nuclear power plants. Without protective shielding, the fuel's intense radioactivity can kill a person exposed directly to it within minutes or cause cancer in those who receive smaller doses. As the fuel ages, it begins to cool and becomes less radiologically dangerous—some of the radioactive particles decay quickly, within days or weeks, while others exist for many thousands of years. Currently, more than 50,000 tons of commercial spent fuel are stored at 72 sites at or near nuclear power plants in 33 states. Most of this nuclear fuel is stored immersed in pools of water designed to cool the fuel, but some sites also keep older, cooler fuel in "dry storage" units that generally consist of steel containers placed inside reinforced concrete vaults or bunkers. Concerns about the security of these sites and their spent fuel inventories have been raised following the terrorist attacks of September 11, 2001.

To provide secure, permanent disposal for spent fuel, the President and the Congress have approved development of a deep underground repository at Yucca Mountain, Nevada. The Department of Energy (DOE) is to construct and operate the repository after receiving a license from the Nuclear Regulatory Commission (NRC). Shipping this fuel from current storage locations to Yucca Mountain will be managed by DOE, which in 1983 entered into contracts with owners of spent fuel (essentially owners and operators of nuclear power plants) requiring DOE to take title to and dispose of this fuel. DOE estimates that 175 shipments per year over 24 years will be required to move the accumulated inventory of spent nuclear fuel. These shipments have increased public concern about nuclear security. Recent media reports suggest that if terrorists could release spent fuel into the environment during transit or from wet or dry storage sites, particularly near large cities, the human health effects could be severe.

We agreed with your office to (1) review federally sponsored studies that examined the potential health effects of a terrorist attack or a severe accident involving commercial spent nuclear fuel, either in transit or in storage, and (2) identify options for DOE to enhance the security of spent fuel as it develops its plans to ship the fuel to Yucca Mountain. In conducting our review, we did not assess the reliability of data or the methodologies used in the studies that examined potential health effects. We also did not examine economic or broader environmental effects of terrorist attacks or severe accidents, nor did we examine the effectiveness of certain other safety and security measures, such as the effectiveness of armed guards and intrusion barriers.

Results in Brief

NRC and DOE studies indicate a low likelihood of widespread harm to human health from terrorist attacks or severe accidents involving spent fuel—either in transit or dry or wet storage. Spent fuel is a heavy, ceramic material that is neither explosive nor volatile and resists easy dispersal. Tests to date on shipping containers and dry storage containers have shown that, while they can be penetrated under terrorist and severe accident scenarios, their construction allows little release of spent fuel, with little harm to human health. While release of a large quantity of radioactive material from a wet storage pool is theoretically possible, such a release would require an extremely unlikely chain of events. For example, coolant would have to be drained from pools and the fuel left uncovered for a sustained period. Studies reveal that such an event would be extremely unlikely to occur by accident. To supplement the existing body of work on the safety and security of spent fuel, NRC has commissioned additional studies to address technical uncertainties and respond to heightened security concerns.

While NRC and DOE have found that spent fuel may be relatively safe and secure, DOE could potentially enhance the security of this fuel through options such as minimizing the overall number of shipments and picking up fuel in an order that would reduce risk, such as moving older, less dangerous fuel first. DOE's ability to choose some of these options may be limited by its contracts with the fuel owners. These contracts generally require DOE to pick up increments of spent fuel based on the dates that the owners removed these amounts of fuel from their nuclear power reactors. Taken literally, the contracts would require DOE to pick up small amounts of spent fuel at reactor sites scattered across the country. For example, adhering to the shipping queue for the 12 largest nuclear power utilities would result in roughly 576 shipments. In contrast, revising the contracts to allow DOE to pick up larger quantities of fuel at each site

could eliminate about 300 of the shipments. The order in which spent fuel is shipped could also affect safety and security because certain fuel poses more risks based on its age and location. For example, shipping the oldest fuel first could enhance security in transit because this fuel is relatively less radiologically dangerous. However, DOE cannot unilaterally mandate this approach because the contracts allow the fuel owners to decide, once their turn in the shipping queue arrives, which increments of fuel from which of their nuclear plants will actually be shipped. Under contracts, owners could decide, based on operational needs, to ship younger, more radioactive fuel out of wet storage pools first before shipping fuel from dry storage—this choice could allow a fuel owner to free up needed space in a storage pool. We are recommending that, as DOE develops its plans for transporting spent fuel to Yucca Mountain, it identify and assess potential options to enhance the safety and security of this fuel. Exercising any of these options may require renegotiating aspects of its shipping contracts with fuel owners if necessary.

We provided a draft of this report to DOE and NRC for review and comment. These agencies generally concurred with the facts of the report. DOE noted that the information on transit was accurate and balanced, and concurred with our recommendation with one exception. DOE noted that the Department of Transportation is conducting a study of the safety and security implications of transporting spent fuel by railroad trains that haul only spent fuel. DOE explained that it would prefer to wait for the outcome of this evaluation rather than duplicate efforts. NRC noted that, overall, the report provides a reasonable characterization of the current understanding of risks associated with spent fuel storage. NRC raised concerns about our references to two NRC studies in our report. NRC expressed concern that we needed to further emphasize NRC's use of conservative assumptions in these two reports, such as the assumption that a fire in a spent fuel pool would involve 100 percent of the spent fuel assemblies in a pool. We revised the report to account for these concerns and added preliminary results from NRC's ongoing work involving risks associated with spent fuel pools.

Background

Fuel for nuclear power plants consists of fingernail-sized pellets of uranium dioxide, a radioactive compound. The pellets are fitted into hollow metal rods, typically constructed of zirconium alloy, and the rods are then gas pressurized. The rods are generally 12 to 14 feet in length and are bundled together into assemblies. A portion of the assemblies must be replaced every 1 to 2 years as the fuel in the reactor expends energy, becoming less efficient at producing heat. As part of the process of

expending energy during a nuclear reaction, the fuel becomes highly radioactive and thermally hot. Spent fuel emits radiation as a consequence of radioactive decay. Barriers such as thick walls, sealed containers, and water are used to shield individuals from exposure to this radiation.

NRC regulates not only the construction and operation of commercial nuclear power plants but also the storage, transportation (together with the Department of Transportation), and disposal of spent fuel. NRC requires each operating nuclear power plant to have safety and security programs. For example, NRC requires protective shielding and security systems, including armed guards, at nuclear power plants. When spent fuel assemblies are removed from a reactor, they are stored in large pools of cooling water. These pools are constructed according to NRC's requirements, typically with 4- to 6-foot thick steel-lined concrete walls and floors. Pools are typically 30 to 60 feet long, 20 to 40 feet wide, and 40 feet deep. The location of these pools is dependent on the type of reactor. Essentially, all commercial power reactors in the United States are one of two types, either a boiling water reactor or a pressurized water reactor.[1] For most boiling water reactors, the pools are located close to the reactors, several stories above ground. For pressurized water reactors, the pools are located in structures outside the reactor building, on the ground or partially embedded in the ground. Regardless of reactor type, these pools are required by NRC to be constructed to protect public health against radiation exposure, even after a natural disaster, such as an earthquake. The water in the pool is constantly cooled and circulated, and the fuel assemblies are generally 20 feet below the surface of the water.

[1] A boiling water reactor uses slightly radioactive steam that is generated in the reactor to drive a turbine that generates electricity. The water is returned to the reactor core where it is reheated to steam, driving the turbines as the cycle is repeated. Pressurized reactors send slightly radioactive pressurized water to a steam generator, which creates steam from nonradioactive water kept separated by tubes. The steam drives the turbine and the slightly radioactive water returns to the reactor where it is reheated and the cycle repeated.

In 1982, through the Nuclear Waste Policy Act, the Congress directed DOE to construct an underground repository for disposal of spent fuel and other high-level radioactive waste.[2] The Congress amended the act in 1987 and required DOE to only consider Yucca Mountain, Nevada, as a potential site for a repository.[3] In 2002, the President recommended to the Congress, and the Congress approved, Yucca Mountain as a suitable site for the development of a permanent high-level waste repository. As we reported in 2001, for a variety of reasons, DOE is unlikely to open the repository as planned in 2010.[4]

Lacking a long-term disposal option now, some nuclear utilities must move a portion of their spent fuel into dry storage or face shutting down their plants because their wet pools are reaching capacity. Currently, 25 of the 72 storage sites use dry storage, and 11 other sites have plans to move some of their inventory of spent fuel into dry storage. Dry storage facilities for spent fuel typically consist of steel containers that are placed inside concrete vaults or bunkers where the fuel is cooled by air rather than water. These storage systems are required by NRC to be capable of protecting against radiation exposure and of surviving natural disasters. Because the move to dry storage is time-consuming and expensive, utilities are, wherever possible, modifying wet pool storage capacity so they can store larger quantities of spent fuel in these pools.

[2] This other waste is the result of nuclear activities from DOE—90 percent of the volume of waste expected to be shipped to the Yucca Mountain repository is expected to be spent fuel and the other 10 percent is expected to be DOE waste.

[3] Yucca Mountain, Nevada, is located approximately 100 miles northwest of Las Vegas, Nevada.

[4] U.S. General Accounting Office, *Nuclear Waste: Technical, Schedule, and Cost Uncertainties of the Yucca Mountain Repository Project*, GAO-02-191 (Washington, D.C., Dec. 21, 2001).

Figure 1: Locations for Wet and Dry Storage Sites for Commercial Spent Nuclear Fuel and Yucca Mountain, as of April 2003

Sources: DOE and NRC (data); GAO (presentation).

To expose a large number of people to the harmful effects of radiation from spent fuel, the fuel would have to be released from its protective containers and dispersed over a wide or densely populated area. However, unlike many other hazardous materials, spent fuel is a hard, heavy ceramic material that is neither explosive nor volatile.[5] To achieve a wide dispersal, some portion of the spent fuel assemblies would have to be pulverized into small particles by an external force—such as a high-speed impact or a violent explosion—or some portion of the spent fuel assemblies would have to burn in a sustained, high-temperature fire. According to NRC, the redundancy and robustness of the designs of the fuel containers make wide dispersal highly unlikely. In the event of a dispersal, the most significant health effects would involve persons who inhaled very small (respirable) particles—10 microns or less in diameter.[6] Such particles would be absorbed into the body and possibly remain there for many years. In addition, these particles could be deposited on buildings and the ground where, in the absence of a costly cleanup effort, they could expose people to elevated levels of radiation.

The transportation of spent fuel to Yucca Mountain—most likely by both truck and rail, but with a preference for using mostly rail—will be a major undertaking, spanning 20 to 30 years.[7] According to DOE, more than 50,000 tons of the spent fuel have accumulated at 72 sites in 33 states, many located near urban areas in the Midwest and the East. DOE has estimated that the accumulated inventory will have grown to 69,000 tons by 2010 and that moving this volume could require approximately 175 shipments per year over 24 years, relying on a combination of truck and rail shipments.

For the transportation of spent fuel, NRC has certification and inspection requirements for shipping containers to ensure that the containers protect

[5] Spent fuel rods recently discharged from a reactor also contain some radioactive gases that are a by-product of the nuclear fission process—these gases account for a small fraction of the total quantity of radioactive material in spent fuel rods, but because of the short half lives of the material, the gases decay quickly and may not be present in older spent fuel.

[6] A micron is one millionth of a meter in length—by comparison, one micron is about 1/70 the thickness of a human hair.

[7] At the present time, there is no direct rail service to Yucca Mountain and the closest rail line is 100 miles away. Until a branch rail line is established, intermodal transfer stations with interim storage may need to be established to transfer shipping containers from rail to truck for the final trip to Yucca Mountain.

against radioactive releases under accident scenarios. NRC has certified a number of shipping container designs for use on trucks and rail. The Nuclear Waste Policy Act of 1982, as amended, requires DOE to ship spent nuclear fuel and high-level radioactive waste to Yucca Mountain in containers that have been certified by NRC. The act also requires DOE to notify NRC in advance of spent fuel and high-level radioactive waste shipments.

In addition to NRC, the Department of Transportation plays a role in regulating the transportation of spent fuel and other high-level waste. The department's Research and Special Programs Administration sets certain safety standards for the transportation of hazardous materials, including spent fuel. These standards include, among other things, documentation and labeling of containers, including placards identifying the shipment, and requirements for separating certain radioactive materials while in transit. The Federal Motor Carrier Safety Administration oversees the safety of shipments by highway, and the Federal Railroad Administration oversees the safety of shipments by rail. The U.S. Coast Guard oversees the safety of shipments that may be made by barge.

Likelihood of Widespread Harm from Terrorist Attacks or Severe Accidents Involving Spent Fuel Is Low

Studies conducted by NRC and DOE have consistently found that the likelihood of widespread harm to human health from a terrorist attack or a severe accident involving spent fuel is very low. None of the studies involving the transportation of spent fuel or dry storage of spent fuel identified a scenario resulting in widespread harm—largely because of the protective containers required by NRC. For example, these studies repeatedly found that transportation containers would be very difficult to penetrate, and in the worst-case scenarios where they may be penetrated, only a small fraction of the material would be released. Some studies involving spent fuel stored in pools of water found that widespread harm is possible under severe but unlikely accident conditions. Such conditions may include a catastrophic earthquake or a severe but unlikely accident that could uncover the fuel for several hours, possibly allowing it to spontaneously ignite and scatter radioactive material over a wide area. To respond to increased security concerns stemming from the September 11, 2001, terrorist attacks, NRC is further studying the safety and security of spent fuel in transit and in wet or dry storage, including the potential effects of more extreme attack scenarios such as deliberate aircraft crashes.

Shipping Containers Protect against Widespread Release of Fuel in Transit

Since the late 1970s, federal studies have examined the effects of both terrorist acts of sabotage and severe accidents involving shipping containers for spent fuel. Sabotage studies have sought to determine whether radioactive material could be released from shipping containers in specific sabotage scenarios, while accident studies have assessed whether radioactive material could be released in a variety of accidents, and the overall probability of their occurrence. Some of these studies were commissioned by NRC, and others by DOE, and many of them were conducted through DOE's Sandia National Laboratory and other DOE laboratories. These studies collectively indicate that the construction of the shipping containers helps to limit releases.[8] Although NRC is confident in these results, it is sponsoring assessments to further validate computer models and address heightened security concerns.

Sabotage Studies

The most recent sabotage study—conducted by DOE's Sandia National Laboratory for DOE in 1999—estimated the amounts and characteristics of releases of radioactive materials from truck and rail spent fuel containers subjected to two different types of weapons.[9] The results of this study confirmed the findings of earlier studies that armor-piercing weapons could penetrate shipping containers and release small quantities of radioactive material. The study found that, under a worst-case scenario, the weapon could penetrate a shipping container and release a small amount of material—equal to about 0.016 of 1 percent of the spent fuel in the container—as small, respirable particles. These small, respirable particles could become airborne and spread beyond the immediate vicinity of the attack.[10]

A subsequent DOE-sponsored report used the results of the 1999 Sandia National Laboratory study to estimate the human health impact of the

[8] See appendix I for a more detailed description of the NRC-certified spent fuel shipping containers.

[9] Sandia National Laboratory, *Projected Source Terms for Potential Sabotage Events Related to Spent Fuel Shipments*, SAND 99-0963, a report prepared at the request of the Department of Energy, Albuquerque, N.Mex., June 1999.

[10] Rather than focus on the entire amount of material released, this and other studies focused on the amount of respirable particles—these particles can potentially become airborne, transported to densely populated areas, and inhaled. By comparison, the nonrespirable material would be a more localized problem that could be more easily contained and controlled.

most severe release.[11] Using a computer-based analytic model and conservative assumptions, DOE's contractor found that the predicted release from a truck container would cause about 48 cancer deaths over the long term and that a predicted release from a rail container would cause about 9 cancer deaths over the long term.[12] DOE's contractor's analysis explained that these cancer deaths should be considered against a backdrop of an expected 1.1 million cancer deaths among the same population expected from other causes. This analysis assumed that the release would occur in an urban area with a population projected to the year 2035 under stable weather conditions. The analysis also assumed that the spent fuel release would contain twice the radioactive content of a typical spent fuel shipment and that there would be no evacuation or cleanup of the affected area for 1 year after the incident.[13]

These studies are the most recent in a series of studies dating back to the 1970s. According to NRC and DOE officials, confidence in the results of these studies has increased significantly as better data and more sophisticated analytic techniques have been used. Appendix II contains a fuller description of the methodology of these recent studies and the results of previous studies.

Accident Studies

Since the 1970s NRC has also sponsored a series of studies examining the risk that spent fuel could be released during transportation accidents. NRC's most recent assessment of spent fuel transportation accident risks was conducted for NRC by Sandia National Laboratory and was published in 2000.[14] The 2000 Sandia National Laboratory study, like preceding accident studies, found that an accidental release of spent fuel in transit is very unlikely and that significant human health impacts are even less likely. The study estimated that in over 99.9 percent of all truck and rail

[11] Jason Technologies Corporation, *Transportation Health and Safety Calculation/Analysis Documentation in Support of the Final EIS for the Yucca Mountain Repository*, a report prepared at the request of the Department of Energy, Las Vegas, Nev., December 2001.

[12] The respirable particles include solid particles of spent fuel, radioactive gases released from the fuel rods, and particles of radioactive deposits that accumulate on the exterior of the fuel assemblies.

[13] Appendix II contains a summary of the methodology of both the 1999 Sandia National Laboratory study and the subsequent DOE analysis.

[14] U.S. Nuclear Regulatory Commission, *Reexamination of Spent Fuel Shipment Risk Estimates*, NUREG/CR-6672, Washington, D.C., March 2000.

accidents, the shipping container would experience no significant damage, and no radioactive material would be released. In fact, the analysis found that only 7 in 100,000 (0.007 of 1 percent) truck accidents and 4 in 100,000 (0.004 of 1 percent) rail accidents would involve spent fuel casks in impacts or fires that might cause a release of radioactive material. While this study did not project the human health impacts of particular accident scenarios, it concluded that the overall risk of human exposure to accidental releases of spent fuel was far less than that estimated in the 1977 study, which confirmed that NRC's safety and security regulations then in place were adequate.

A subsequent DOE-sponsored study used the results of the 2000 Sandia National Laboratory study to determine the potential health effects of the estimated quantity of material released.[15] DOE's contractor used the estimated amount of material released in what DOE determined as the most severe reasonably foreseeable accident to estimate the number of latent cancer fatalities that could result from severe accidents while shipping spent fuel to the Yucca Mountain repository.[16] From this study, DOE concluded that this type of accident—having a probability of occurring about 2.8 times in 10 million accidents per year—could cause about 5 long-term latent cancer fatalities—far less than its estimate of 48 latent cancer deaths in the event of a successful sabotage attack with armor-piercing weaponry. Apart from this type accident, DOE found that the probability of any deaths due to an accidental release of radiation was quite small. DOE's final environmental impact statement for Yucca Mountain projected that accidents over 24 years of shipping would cause fewer than 0.001 latent cancer fatalities. In contrast, DOE projected that these same shipments had a much greater probability of resulting in deaths due to normal traffic accidents—between 2.3 and 4.9 traffic fatalities over the same 24-year period.

As with the sabotage studies, these studies of accident scenarios are the most recent in a series of studies dating back to the 1970s. According to NRC and DOE officials, confidence in the results of these studies has

[15] Jason Technologies Corporation, *Transportation Health and Safety Calculation/Analysis Documentation in Support of the Final EIS for the Yucca Mountain Repository*, a report prepared at the request of the Department of Energy, Las Vegas, Nev., December 2001.

[16] According to DOE, this accident involved a high-temperature, long duration fire that fully engulfed a rail container.

increased significantly as better data and more sophisticated analytic techniques have been used. Appendix II contains a fuller description of the methodology of these recent studies and the results of previous studies.

Ongoing and Planned Assessments

Although NRC believes that the results of the federally sponsored studies are valid, it has several evaluations ongoing and planned to further assess its security and safety measures. To assess its existing security measures following the September 11, 2001, terrorist attacks, NRC initiated a commissionwide review. As part of this review, NRC commissioned Sandia National Laboratory to examine more severe terrorist attack scenarios involving spent fuel shipping containers. For example, the laboratory will assess the effects of (1) a 20-passenger aircraft loaded with explosives crashing into shipping containers and (2) a sustained attack on these containers using a variety of weapons in combination.

As part of an ongoing process to assess its safety measures, NRC has a number of ongoing and planned studies. NRC commissioned Sandia National Laboratory for further validation of computer models used to evaluate the safety of shipping containers. To solicit comments on the scope of its evaluation, NRC held a series of public meetings beginning in 1999. It considered comments obtained during these meetings and issued an interim report in 2002 that recommended several additional studies.[17] Although these studies are still being designed, their preliminary objectives include (1) validating past computer-based predictions of damage to containers resulting from collisions, (2) validating past computer-based predictions of how well containers withstand fires, and (3) identifying the response of fuel pellets, fuel rods, and fuel assemblies in severe impacts. In contrast to past analyses of severe accident scenarios, the studies are to include physical tests of full-scale current model shipping containers. The results of these physical tests will be compared to the predictions of past computer-based analyses and serve to either validate or to correct those results. The studies are also to address some of the technical issues that were not adequately addressed by past accident analyses. For example, while past studies relied on expert judgment to assess the complex chain of variables involved in releasing respirable spent fuel from containers—including fracturing spent fuel rods and pellets—the planned studies will examine these events experimentally.

[17] Sandia National Laboratory, *Spent Nuclear Fuel Transportation Package Performance Study Issues Report*, NUREG/CR-6768, a report prepared for the Nuclear Regulatory Commission, June 2002.

According to NRC officials, the studies are expected to be completed by 2006.

Widespread Release from Wet Storage Theoretically Possible but Unlikely

NRC studies have reported that a risk of widespread harm to human health from spent fuel arises from the remote possibility of a sustained loss of coolant in a spent fuel pool. Such a loss could potentially lead to a fire that would disperse radioactive material across a wide area. NRC's most recent published study of this risk, released in 2001, found that, though the potential consequences of such a fire could be severe—nearly 200 early fatalities and thousands of latent cancer fatalities—the likelihood of such a fire is low.[18] The study estimated that a catastrophic earthquake or a severe but unlikely accident, such as dropping a 100- to 150-ton storage container into the pool, could precipitate a pool fire.

The study was conducted to assess the risks associated with accidents at nuclear reactors that have been permanently shut down. According to NRC, once the fuel is removed from the reactors, there is a risk associated with the fuel stored in pools. NRC designed the study with conservative assumptions to identify the most severe possible impact on public health. The study assessed a variety of natural disasters and accidents that could drain coolant and cause a fire. These events included loss of electrical power, which would shut down the pool cooling system; an event that would significantly damage the pool cooling system; a drop of a heavy load, which could damage the pool wall or floor; a severe earthquake; and an accidental aircraft crash. The study found that a catastrophic earthquake and a heavy load drop were the events most likely to significantly damage the pool, leading to sustained loss of coolant and potentially causing a fire.

The study then calculated the amount of radioactive material that might be released by a fire and the possible human health effects stemming from exposure to this material. In making these calculations, the study made various conservative assumptions to ensure that NRC identified the most severe consequences possible. For example, the study assumed that a pool fire would involve 100 percent of the spent fuel assemblies in the pool, releasing large amounts of radioactive material into the atmosphere.

[18] U.S. Nuclear Regulatory Commission, *Technical Study of Spent Fuel Pool Accident Risk at Decommissioning Nuclear Power Plants*, NUREG-1738, Washington, D.C., February 2001.

Two of the authors of the study noted that it was not certain how many spent fuel assemblies would actually burn in a fire. The uncertainty in the amount of radioactive material released depends on the fuel age and distribution in the pool and the characteristics of the accident scenario. The authors noted that some spent fuel assemblies might not reach the high temperatures required to burn and that some of the radioactive material might remain trapped in the pool or building. Because spent fuel decays and thus becomes less dangerous over time, the study evaluated scenarios in which the reactor had been shut down for 30 days, 90 days, 1 year, 2 years, 5 years, and 10 years. For each scenario, the study evaluated two levels of radioactivity released from the fuel. NRC used the results of this study to calculate the potential health effects of a fire in a spent fuel pool. These results are shown in table 1.

Table 1: Potential Health Effects of Fire in a Spent Fuel Pool

	Lower level of radioactivity[a]		Higher level of radioactivity[a]	
Time after shutdown of reactor	Number of early fatalities	Number of latent cancer fatalities	Number of early fatalities	Number of latent cancer fatalities
30 days	2	3,500	200	15,000
1 year	1	[b]	80	[b]
5 years	0	[b]	1	[b]
10 years	0	[b]	0	7,500

Source: NRC.

[a]NRC assumed a low level and a high level of ruthenium in the dispersed spent fuel. Ruthenium, found in higher levels in recently discharged fuel, is a particularly lethal isotope when dispersed in small particles.

[b]Information not available.

The study noted that the results are based on a natural disaster or an accident severe enough to lead to a pool fire and that the risk of such an event occurring is very low. NRC also noted that part of the reason for the low probability is NRC's defense-in-depth policy, which states that NRC establishes requirements to ensure that safety will not be wholly dependent on any single system. Instead, NRC's requirements ensure multiple or redundant safety systems. In the case of the storage pool studied in the 2001 report, NRC noted that several factors combine to make a pool fire unlikely, including the robust design of the pool; the simple nature of the pool support systems; and the long time required to heat up the fuel, which allows time for operators to respond.[19] For

[19] See appendix I for a description of the NRC-certified wet storage pools.

example, according to the 2001 report, heating the least-decayed spent fuel to the ignition point—were it to occur at all—would take hours, perhaps even days. Thus, NRC officials explained that even if a massive loss of coolant occurred, plant operators might still have time to react, depending on the extent of the damage. NRC requires that nuclear power plants have a backup water supply that can cool fuel in case of an accident, so, depending on the extent of damage, plant operators might be able to keep the fuel submerged.

The risk of a pool fire is also limited by the ability of some of the fuel to be cooled by simple air ventilation if the coolant drains out. According to NRC, completely draining a pool may allow enough air ventilation among the stored fuel assemblies so that the spent fuel would stay below the ignition point of a self-sustaining fire (about 1,650 degrees Fahrenheit). Furthermore, even if a fire did begin in one assembly, there is considerable uncertainty about whether the fire would spread to other assemblies. A 1987 study of spent fuel pools found that spent fuel in pools with fewer assemblies, after being cooled for just a few weeks, would not ignite if subjected to loss of coolant.[20] Under the dense storage conditions characterized by most spent fuel pools today, however, air ventilation becomes less effective.

NRC Continues to Study the Risks of Storing Spent Fuel in Pools

To begin addressing some of the uncertainties regarding the risks of storing spent fuel in wet storage pools, NRC has some ongoing work, and recently completed some initial evaluations of sabotage attacks on these pools, and has more work planned and ongoing at two DOE national laboratories. Following the terrorist attacks of September 11, 2001, NRC commissioned the U.S. Army Corps of Engineers to examine potential effects of sabotage directed at spent fuel pools. The Corps conducted several computer-based analyses of the potential effects of armor-piercing weapons and high explosives on typical spent fuel pools. The analyses found that the penetration of armor-piercing weapons and high explosives could vary considerably, depending, among other things, on the size of the weapon or explosive and the sophistication of the attacker.

NRC is also conducting studies with less conservative assumptions to more realistically evaluate the risks of spent fuel in a drained pool. NRC

[20] Brookhaven National Laboratory, *Severe Accidents in Spent Fuel Pools in Support of Generic Safety Issue 82*, NUREG/CR-4982, a report prepared for the U.S. Nuclear Regulatory Commission, July 1987.

has contracted with Argonne National Laboratory to study the conditions necessary to ignite a pool fire. NRC has also contracted with Sandia National Laboratory for a series of studies to define potential threats, and to identify potential vulnerabilities, regulatory improvements or legislative initiatives to improve security and safety and better protect public health. The studies by Sandia National Laboratory include a review of a variety of terrorist scenarios, including attacks on fuel pools with aircraft and high explosives. According to NRC, preliminary results of these studies indicate that spent fuel may be more easily cooled than has been predicted in some past studies and that off-site radiological releases may be substantially reduced from previous worst-case estimates. Predicted public health effects might also be substantially reduced for the worst scenarios where coolant is lost and recovery actions are not successful in cooling the fuel.

Dry Storage Containers Safeguard against Widespread Release

Dry storage containers, like shipping containers, pose a considerable barrier to releasing spent fuel. Used to store spent fuel when it is removed from wet storage, dry storage containers are constructed of layers of steel and radiation barriers such as concrete.[21] In establishing regulations for dry storage of spent fuel, NRC stated in 1998 that dry storage containers are structurally similar to shipping containers and that the results of sabotage studies on shipping containers could reasonably be applied to dry storage containers. Nevertheless, NRC is continuing to study potential risks of releases from dry storage containers.

Studies by DOE and the Corps on dry storage containers have generally reached the same conclusion—that the thick walls of the containers, consisting of an inner steel container and an outer steel or concrete container, could not be penetrated by airplane crashes and would result in no significant release of radiation when attacked with advanced weapons. Two DOE-sponsored reports, released in 1998 and 2001, found that airplane crashes would not penetrate dry storage containers.[22] The reports focused on the most penetrating components of the commercial jet aircraft: the engines and landing gear. Both reports concluded that

[21] See appendix I for a description of the of the NRC-certified dry storage containers.

[22] Jason Technologies Corporation and Pacific Northwest National Laboratory, *Accident Analysis for Continued Storage*, a report prepared for the U.S. Department of Energy, October 27, 1998. Jason Technologies Corporation, *An Evaluation of the Consequences of a Commercial Aircraft Crash into the Yucca Mountain Repository*, a report prepared for the U.S. Department of Energy, December 2001.

although airplane crashes could damage the containers, no radioactive material would be released. The analysis showed that the containers would break up the airplane, spreading jet fuel over a wide area, causing the jet fuel to dissipate or burn without affecting the spent fuel in the containers.

Two other studies, performed in 2001 by the Corps, found that the containers would not release significant amounts of radioactive material when attacked by armor-piercing weapons or high explosives. The study examining the effect of armor-piercing weapons found that the penetration to the containers was very limited. NRC and DOE officials and independent experts told us that, based on a previous analysis and similar studies involving shipping containers, the weapons would not likely cause a significant release. The study examining the effects of high explosives found that the explosives would not completely penetrate the container. The study showed extensive exterior damage, but no penetration to the spent fuel.

NRC Continues to Study Risks to Dry Storage Containers

NRC is continuing to study potential risks to dry storage. NRC has contracted with Sandia National Laboratory to assess the vulnerability of dry storage containers to terrorist attacks, including a further analysis of aircraft crashes and the effects of high explosives. In addition, the laboratory will investigate measures to mitigate any vulnerability identified through the assessment.

Options May Exist to Further Enhance Security and Safety

As DOE develops its plans for shipping spent fuel to the Yucca Mountain repository, the agency has several potential options for enhancing the security of spent fuel during the Yucca Mountain shipping campaign. Specifically, DOE could potentially minimize its total number of spent fuel shipments, ship the fuel in an order that reduces risk, or transport the fuel on railroad trains dedicated exclusively to hauling spent fuel. Not all of these options may be feasible under the terms of DOE's contracts with spent fuel owners, and some options for shipping in a particular order would conflict with one another.

Minimizing Number of Shipments

DOE could enhance the overall security of spent fuel by minimizing the total number of shipments. Fewer shipments would present fewer potential targets for terrorists and could also enhance safety because there would be fewer chances for an accident. Representatives of the nuclear power industry and nuclear safety experts that we contacted agreed on these points. For example, a representative of a consortium of nuclear utilities told us that shipping spent fuel by rail is preferable to shipment

by truck because spent fuel containers designed for rail can carry about 5 times more spent fuel than truck containers. This larger capacity translates to fewer shipments overall. Similarly, a frequent critic of the safety of spent fuel shipments agreed that fewer shipments would be better, noting that fewer, large shipments are easier to protect and track. Beyond expressing a preference for shipping spent fuel to Yucca Mountain mostly by rail, DOE has not yet developed its plans to implement the shipping campaign.

In addition to providing security advantages, minimizing the number of shipments by using rail provides safety and efficiency benefits. According to a 1998 Department of Transportation report, rail was the safer mode for shipping large amounts of spent fuel.[23] The report states that minimizing trips usually reduces total risk by reducing risks associated with routine radiation exposure—such as the incidental exposure experienced by transportation and plant workers while shipping containers are being prepared—as well as accident-related exposure and other nonradiation accident consequences.

DOE's ability to minimize the total number of shipments may be limited by its contracts with owners of spent fuel. Under the contracts, DOE is to establish a shipping queue, in which each utility has shipping rights based on the date and quantity of fuel removed from a reactor. In many cases, the places in the queue correspond to quantities of spent fuel that would fill less than three large rail containers—an amount that, according to the Association of American Railroads, would be a reasonable size for a single rail shipment. If strictly followed, the queue could result in many more shipments than necessary. For example, the 12 spent fuel owners with the largest quantities of spent fuel would make approximately 576 shipments based on the shipping queue.[24] On the other hand, if these 12 owners consolidated all their shipments into rail containers and used 3 containers per shipment, they could reduce their total shipments to 479, a 17 percent reduction. If these same owners consolidated shipments into 5 rail containers per shipment, which according to DOE is another

[23] *Identification of Factors for Selecting Modes and Routes for Shipping High-Level Radioactive Waste and Spent Nuclear Fuel*, U.S. Department of Transportation, Research and Special Programs Administration, April 1998.

[24] These figures are based on our analysis of DOE's 1995 Acceptance Priority Ranking (U.S. DOE Office of Civilian Radioactive Waste Management), the most recent version published.

possible option, total shipments could be reduced to 287—a nearly 50 percent reduction.

Order in Which Spent Fuel Is Shipped Could Enhance Security

DOE could also enhance security by shipping spent fuel in an order that minimizes risk. There are at least three shipping orders that would potentially reduce risk: (1) shipping fuel from shutdown nuclear reactors first, reducing the number of sites storing spent fuel; (2) shipping the oldest and least radiologically dangerous fuel first to reduce transportation risk; or (3) shipping fuel from storage pools first, reducing the likelihood of a pool fire. Shipping fuel first from shutdown nuclear reactors would be permissible under DOE's contracts with fuel owners, but the contracts might preclude the other two options. Further, to some extent, these options conflict with one another. For example, an emphasis on shipping fuel from spent fuel pools first could leave some older fuel in dry storage at current storage facilities. Data are not available to determine which order would provide the greatest risk reduction.

Shipping Fuel from Shutdown Reactor Sites First

DOE could potentially enhance the overall security of spent fuel by first shipping fuel currently stored at shutdown nuclear reactor sites. Currently, about 4,100 tons of spent fuel—about 8 percent of the total stored nationwide—are stored at 14 shutdown nuclear reactors.[25] Because nine of these sites will not be accumulating additional spent fuel, clearing their spent fuel inventory would eliminate them as potential targets of a terrorist attack.[26]

DOE recognized the potential importance of removing spent fuel from shutdown reactors when it established its contracts for disposal of spent fuel. Although the contracts establish a shipping queue, the contracts allow DOE to override the queue to make an exception for spent fuel from shutdown reactors. Specifically, the contracts provide that, notwithstanding the age of spent fuel, priority may be accorded any spent fuel removed from a civilian nuclear power reactor that has reached the end of its useful life or has been shut down for whatever reason.

[25] In addition to permanently shutdown reactor sites, a limited quantity of spent fuel is stored at an independent storage facility in Morris, Illinois.

[26] Four of the shutdown reactors are co-located with operating reactors.

Shipping Oldest Fuel First

DOE could lower the risk of transporting spent fuel by shipping the oldest spent fuel first. Radioactivity emitted by some components of spent fuel declines significantly over comparatively short periods of time.[27] For example, one of the more radioactive elements in spent fuel—cobalt^{60}—accounts for about 90 percent of the gamma radiation emitted by spent fuel when it is first removed from the reactor.[28] However, after about 25 years, cobalt^{60} emits about 3 percent of the gamma radiation it did when first removed from the reactor. Similarly, the radioactivity of cesium^{137}, a comparatively volatile element that would be a major component of any accidental or deliberate release, declines by half after 30 years. Shipping older spent fuel first could therefore be preferable in the event of a deliberate or accidental release during transit. For example, a release of spent fuel that is 25 or 30 years old would be a lesser—though still significant—threat to public health than fuel that is only 5 or 10 years old.

Analyses performed for DOE's environmental impact statement for the Yucca Mountain repository illustrate the reduced impact that a release of older spent fuel can have on public health. In the draft environmental impact statement, DOE estimated that a particular release due to a sabotage attack could result in about 16 latent cancer fatalities. This scenario assumed that the shipped fuel was about 23 years old, which is approximately the average age of the inventory of spent fuel. The final environmental impact statement analyzed the same scenario, except that it assumed that the shipped fuel was about 15 years old. This analysis found that such a release would cause about 48 latent cancer deaths—3 times as many as the older fuel. The age of the fuel was one of two major factors that resulted in the higher estimate of latent cancer fatalities in the final statement. DOE noted that the younger, more dangerous fuel, such as spent fuel discharged 5 years or less from a reactor, makes up a small percentage of the total inventory of spent fuel. As a result, the youngest, hottest fuel would be less likely to be shipped or would represent a small fraction of the fuel that is shipped.

In discussions on security and safety issues surrounding the proposed shipment of fuel to Yucca Mountain, some state and industry representatives that we contacted also acknowledged the benefits of

[27] Some components of spent fuel remain deadly for thousands or millions of years. For example, uranium^{235} requires about 704 million years for its radiation output to be cut in half.

[28] As mentioned previously, gamma radiation can damage critical organs of the body.

shipping older spent fuel first. An analyst under contract with the state of Nevada noted that shipping the oldest fuel first would be the most important factor in protecting public health during transit. Not only would older fuel have lower consequences if released in an accident or a terrorist event, but it also would be safer for transportation workers—drivers and handlers at intermodal transfer points—and the general public. A representative of the National Research Council's Board on Radioactive Waste Management told us that shipping the oldest fuel first would help minimize potential human health consequences in the event of a release during transit. However, this representative said that if one assumes that the robust shipping containers make a release unlikely, the potential risk reduction associated with the age of the fuel becomes less important.

Regardless of the potential transportation-related security benefits, DOE's contracts with spent fuel owners limit its ability to ship the oldest fuel first. In addition to establishing a shipping queue, the contracts allow each fuel owner discretion to decide which of its spent fuel is actually delivered to DOE, commensurate with the quantity of fuel associated with a particular spot in the queue. For example, the Exelon company—the nation's largest nuclear power company—has a place in the queue for about 35 tons of spent fuel removed from a reactor located at its plant in Zion, Illinois. When the time comes to ship this fuel to the repository, Exelon may deliver either this fuel or an equal quantity of fuel—possibly much younger and more radioactive fuel—from any of its facilities located at sites in Illinois and sites in Pennsylvania and New Jersey.

Because owners have discretion to choose which fuel they will actually ship under the terms of the contract, DOE does not have the ability under the contract to require that oldest fuel be shipped first. Fuel owners will likely select spent fuel for shipment based on their operational needs. For example, representatives of Progress Energy, a fuel owner with reactors in the Southeast, said they would will likely ship from their pools first because their pools are reaching capacity. Similarly, an Exelon official said that shipping from pools first would minimize the need for dry storage facilities.

Shipping Fuel from Densely Packed Pools First

As discussed in the first section of this report, a fire in a wet storage pool, while highly unlikely, is theoretically possible. Shipping spent fuel from densely packed spent fuel pools first could have security benefits. Because DOE has not yet opened a permanent repository, spent fuel has accumulated in quantities that pools were not originally designed to contain. NRC officials noted that while a few spent fuel pools have low density in at least part of the pools, nearly all pools are densely packed.

These densely packed pools contain as much as 3.5 times more spent fuel on average than the pools were originally designed to store. Reducing the density of spent fuel in the pools would reduce the likelihood of a fire. Recent NRC and independent studies show that lower-density configurations allow for greater spacing between assemblies, which allows air to more efficiently circulate in the event of coolant loss. According to these reports, greater spacing could also help prevent a fire from spreading among assemblies. Also, in the unlikely event of a fire, fewer assemblies in the pool could result in reduced consequences.

As noted earlier, DOE's contracts limit its ability to influence the order in which spent fuel is shipped. Some owners may prefer to ship fuel from densely packed pools first because when the pools reach full capacity, the fuel must be removed or the plant must shut down. To the extent that, as Exelon and Progress Energy officials stated, utilities are likely to ship from their wet pools first, the threat would be reduced earliest at these pools. This would, however, result in a relatively higher threat during transport from relatively younger, more radioactive, spent fuel. It is not clear whether this will be a common preference.

Shipping Fuel on Trains That Haul Only Spent Fuel

According to some analysts, DOE could enhance the security of spent fuel shipments by using trains dedicated to carrying only spent fuel. Such trains would typically consist of three to five rail cars, carrying one container of spent fuel per car. A truck shipment can carry 1 to 2 tons of spent fuel. In contrast, depending on the containers used, a 3-car train can carry from 50 to 65 tons of spent fuel and a 5-car train can carry from about 80 to 110 tons of spent fuel. Although dedicated trains could enhance the security and safety of spent fuel shipments, these benefits would have to be weighed against potential drawbacks. The benefits would also have to be weighed against constructing a rail line to Yucca Mountain. Currently, no rail line extends to Yucca Mountain.

Advocates of dedicated trains told us that such trains offer two primary security and safety advantages. First, the use of dedicated trains would significantly reduce the exposure of spent fuel shipments to a terrorist attack by significantly shortening the trip duration from its point of origin to the repository. A representative of the Association of American Railroads, which recommended that DOE use dedicated trains for the shipment of spent fuel, explained that a spent fuel shipment from the East Coast to Nevada would take about 3 to 4 days by dedicated rail, while the same trip by regular rail would take about 8 to 10 days. Specifically, spent fuel transported by regular rail would spend significant amounts of time in

rail yards where trains are broken up and reconfigured. While in the rail yards, spent fuel containers could be stationary targets.

Second, using dedicated trains would ensure that spent fuel was not shipped with flammable hazardous materials. If spent fuel were released from its containers in an accident or a terrorist attack, a fire fueled by flammable materials could spread radioactive material over a wide area. For example, NRC recently issued an analysis regarding a rail tunnel fire that occurred in Baltimore in July 2001 that involved more than 28,000 gallons of a flammable solvent. NRC estimated that temperatures as high as 1,800 degrees Fahrenheit were reached at certain locations in the tunnel during the course of the fire but found that temperatures averaged 900 degrees in other parts of the fire. NRC studied the potential effects of this fire on a spent fuel transportation container carrying spent fuel and concluded that, when subjected to similar fire conditions, the container would not release radioactive material.[29]

According to transportation officials we spoke to, dedicated trains can also have safety and other benefits beyond sabotage prevention. For example, officials of the Union Pacific Railroad and the Association of American Railroads said that combining cars carrying fully loaded spent fuel containers on trains with those carrying other cargo raises operational and safety issues. Rail cars carrying spent fuel rail containers are extraordinarily heavy—such a car weighs about 470,000 pounds compared to about 200,000 pounds for a standard loaded rail car. This weight differential introduces difficulties in the physical dynamics of a train carrying spent fuel and other cargo, making derailments more likely.

On the other hand, it is not clear that the advantages of dedicated trains outweigh the additional costs. In 1980, while considering amendments to its security regulations, NRC examined the case for requiring dedicated trains for rail shipments of spent fuel. NRC noted the advantages of dedicated trains but also noted that dedicated trains are no more capable of avoiding high-population areas than are regular trains, that a regular train in a rail yard would be under surveillance by escorts and railroad police, and that the necessary physical protection measures can be as easily implemented on regular trains as on dedicated trains. For these and other considerations, NRC declined to require dedicated trains. Further,

[29] *Evaluation of the Effects of the Baltimore Tunnel Fire on Rail Transportation of Nuclear Fuel*. Nuclear Regulatory Commission, January 6, 2003.

although DOE recognized the possible advantages of shipping spent nuclear fuel by dedicated trains, DOE also concluded in its final environmental impact statement that available information does not indicate a clear advantage for the use of either dedicated trains or general freight service.

Conclusions

The events of September 11, 2001, elevated lingering public concerns about the security of spent fuel, and in particular the security and safety of large-scale shipping of spent fuel. NRC and DOE studies show a low likelihood of widespread harm to human health from terrorist attacks or severe accidents involving spent fuel. Nonetheless, DOE could potentially take a number of measures to further enhance the security and safety of the shipping campaign to Yucca Mountain. It is not clear whether the additional security and safety benefits such measures offer are worth the additional costs and effort—possibly including a renegotiation of contracts that DOE has established with the nation's utilities—that they would entail. In addition, it is not clear which of these measures—some of which conflict with each other—would provide the greatest safety and security benefit. However, we believe they should be explored.

Recommendations for Executive Action

To ensure that all reasonable options to further enhance the security and safety of spent fuel in storage at nuclear power plants and in transit are explored, we recommend that the Secretary of Energy assess the potential benefits and costs of (1) minimizing the total number of shipments of spent fuel by consolidating shipments where possible, (2) shipping spent fuel in an order that further minimizes risk, and (3) emphasizing the use of trains dedicated to hauling spent fuel.

Agency Comments and Our Evaluation

We provided DOE and NRC with drafts of this report for review and comment. DOE generally concurred with the facts of the report, noting that the information on transit was accurate and well balanced. DOE also concurred with our recommendations, with one exception. DOE noted that the Department of Transportation was expected to release a study later this year on the safety and security implications of transporting spent fuel by dedicated train. DOE stated that it preferred to wait for the outcome of the study before beginning its own review. DOE also provided technical comments, which we incorporated into the report.

NRC also generally concurred with the facts of the report, noting that the information provides a reasonable characterization of the current understanding of risks associated with spent fuel storage. However, NRC

stated that it does not consider the results of its most recently published studies on spent fuel in a pool and spent fuel in transit, as quoted in the report, to accurately reflect the consequences of a potential terrorist attack. Rather, NRC indicated that the studies started with overly conservative assumptions, resulting in "unrealistically conservative" results. NRC noted that it is currently conducting studies to assess the potential consequences of a terrorist attack that use more realistic assumptions. NRC also noted in its technical comments that preliminary results from these ongoing studies show that potential consequences may be far less severe than reported in the current publications.

We revised our report to account for NRC's preliminary findings from ongoing work involving the risk associated with spent fuel pools. As our report states, these findings indicate that risks from spent fuel pools may be substantially reduced from previous estimates. We used NRC's February 2001 report, *Technical Study of Spent Fuel Pool Accident Risk at Decommissioning Nuclear Power Plants*, with the understanding that the report received a high level of scrutiny both within and outside NRC prior to its publication. As stated in the report, "Preliminary drafts of this study were issued for public comments and technical reviews in June 1999 and February 2000. Comments from interested stakeholders, the Advisory Committee on Reactor Safeguards, and other technical reviewers have been taken into account in preparing this study. A broad quality review was also carried out at the Idaho National Engineering and Environment Laboratory, and a panel of human reliability analysis experts evaluated the report's assumptions, methods, and modeling." The report also states that, based on the comments received, "staff did further analyses and also added sensitivity studies on evacuation timing to assess the risk significance of relaxed offsite emergency preparedness requirements during decommissioning." Given this level of review, we believe it to be appropriate to report the results of this study.

NRC also took issue with our use of its report, *Reexamination of Spent Fuel Shipment Risk Estimates*. NRC explained that the analyses in this document are similarly overly conservative. This March 2000 study was conducted by Sandia National Laboratory at the request of NRC to reexamine the conclusions reached in previous studies regarding the risks of spent fuel shipments. As with its February 2001 report, this report also indicated a high level of review prior to publication. Specifically, the report mentions a number of individuals who provided comments to the report, including staff at Sandia National Laboratory, Lawrence Livermore National Laboratory, and "a number of technical experts at the NRC."

Given the intent of this study and its level of review, we believe it to also be appropriate to report the results of this study.

Scope and Methodology

We performed our review at DOE and NRC headquarters in Washington, D.C., at NRC's Region III office near Chicago, Illinois, and at DOE's Yucca Mountain Project office in Las Vegas, Nevada. We visited several sites where spent fuel is stored, including operating nuclear power plants, a decommissioned nuclear power plant, and independent spent fuel storage sites. We conducted our review from April 2002 to June 2003 in accordance with generally accepted government auditing standards.

To determine the potential health effects of a terrorist attack or a severe accident involving commercial spent nuclear fuel, we examined a variety of federally sponsored studies, primarily conducted or sponsored by DOE and NRC. We examined critiques of these studies prepared by a variety of groups and individuals. We also spoke to many of the authors of these federal studies, authors of critiques of these studies, nuclear energy representatives, and other individuals representing a variety of backgrounds, including academia and special interest groups.

To identify options for DOE to enhance the security of spent fuel as it develops its plans to ship the fuel to Yucca Mountain, we reviewed documents analyzing DOE's plans and preferred alternatives, including the environmental impact statement and many of its supporting documents. We also interviewed DOE, NRC, and Department of Transportation officials responsible for developing and coordinating safe shipments of spent nuclear fuel. We also spoke to state and local government officials in a number states, including Nevada; nuclear energy representatives; and a variety of groups and individuals representing a spectrum of viewpoints on the shipment of spent nuclear fuel.

As agreed with your office, unless you publicly announce the contents of this report earlier, we plan no further distribution of it until 30 days from the date of this letter. At that time, we will send copies of this report to other interested parties and make copies available to others who request them. In addition, the report will be available at no charge on GAO's Web site at http://www.gao.gov/.

If you or your staff have any questions about this report, please call me at (202) 512-3841. Key contributors to this report are listed in appendix V.

Sincerely yours,

Robin M. Nazzaro

Robin M. Nazzaro
Director, Natural Resources
and Environment

Appendix I: Nuclear Regulatory Commission Requirements for Safety and Security of Spent Fuel

As the regulating agency responsible for spent fuel, the Nuclear Regulatory Commission (NRC) must adequately protect the public health and safety against accidents or acts of sabotage. To provide this assurance, NRC uses a "defense-in-depth" philosophy. Consistent with this philosophy, NRC designs its safety and security requirements to ensure that public safety and health are not wholly dependent on any single element of the design, construction, maintenance, or operation of a nuclear facility. More specifically, NRC designs multiple or redundant measures to mitigate areas of known risk or to increase confidence in areas of uncertainty. Listed below are some of the primary requirements NRC has recognized as protecting spent fuel while in transit, in wet storage, and in dry storage.

Requirements for Preventing Release of Spent Fuel in Transit

NRC requires that transporters of spent fuel (1) contain the fuel in NRC-certified shipping containers that must meet stringent durability performance requirements and (2) comply with requirements designed to impede an act of sabotage on the fuel.

NRC regulations for spent fuel shipping containers dictate that the containers prevent releases of significant amounts of radiation under both normal operating conditions and in hypothetical accident scenarios. The containers include shielding to ensure that persons near a container are not exposed to significant amounts of radiation. In addition, the containers must remain intact after a series of simulated accident conditions, including

- an impact test, in which containers are dropped from 30 feet onto a flat, unyielding surface;
- a puncture test, in which containers are dropped from 40 inches onto a 6-inch diameter steel bar at least 8 inches long;
- a fire test, in which containers are engulfed in a 1,475-degree Fahrenheit fire for 30 minutes; and
- an immersion test in which containers are submerged in 3 feet of water for 8 hours.

The containers must survive each of these tests in succession, without significant levels of surface radiation or release of spent fuel. Containers must also be shown to survive water pressure equivalent to immersion under nearly 670 feet of water for 1 hour.

Because of these requirements and the dimensions of the spent fuel assemblies they contain, spent fuel shipping containers are massive and robust. A typical train container is about 25 feet long and 11 feet in

diameter, weighs about 100 tons empty, and about 120 tons fully loaded—thus the container can account for over 80 percent of the total weight of a shipment. Though truck containers have significantly less capacity than rail containers, both types have similar basic designs. As figure 2 indicates, they are generally composed of several layers of shielding material, totaling about 5 to 15 inches in thickness, including a radiation barrier consisting of lead or depleted uranium.

Figure 2: Cutaway Graphic of a Spent Fuel Truck Transportation Cask

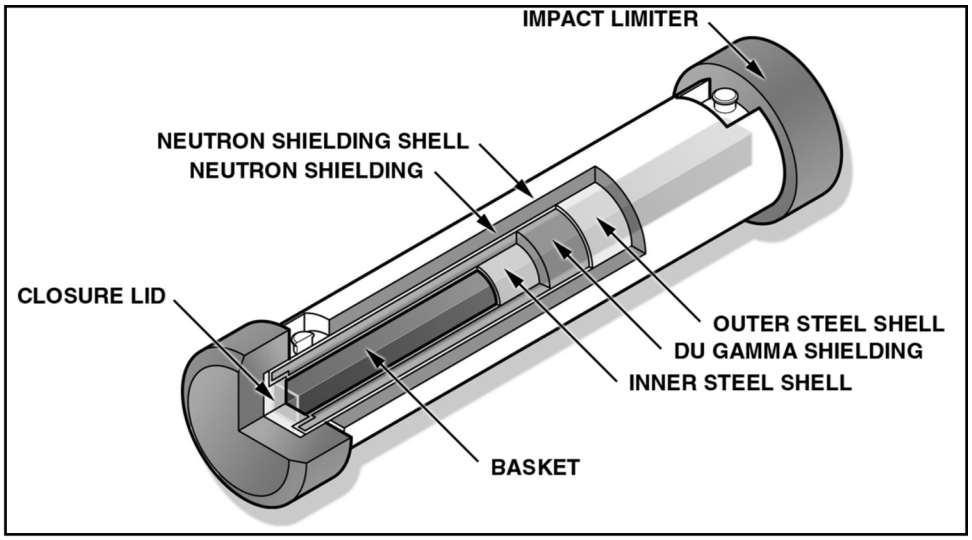

Source: Sandia National Laboratory.

When in transit, each end of the container is made of material that is designed to absorb much of the force of an impact. Figures 3 and 4 show a spent fuel rail container and a truck container, respectively.

Figure 3: Spent Fuel Rail Container

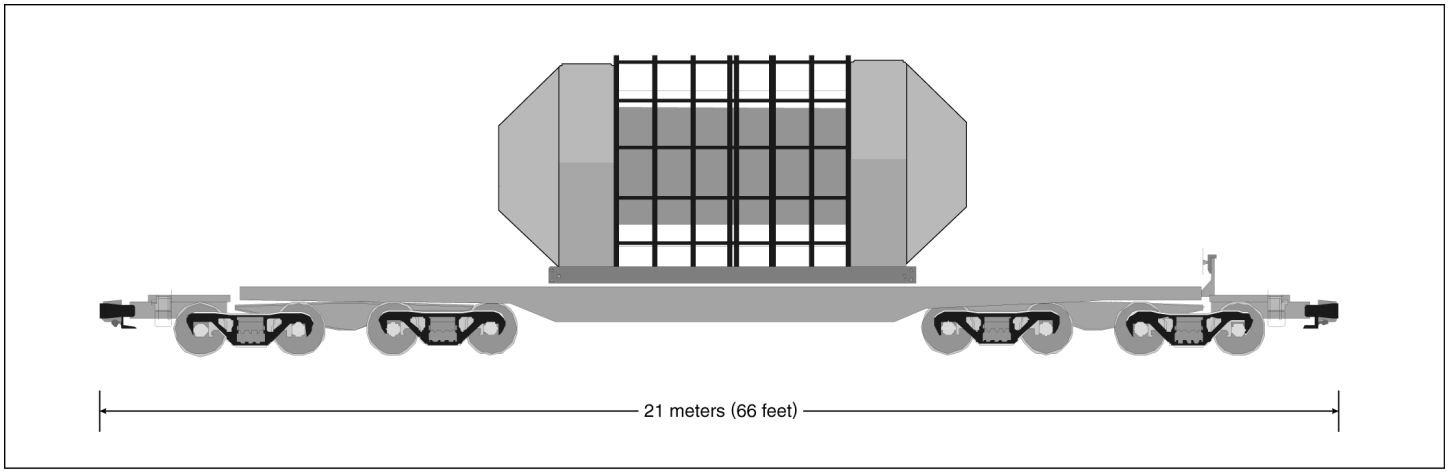

Source: DOE.

Figure 4: Spent Fuel Truck Container on a Trailer

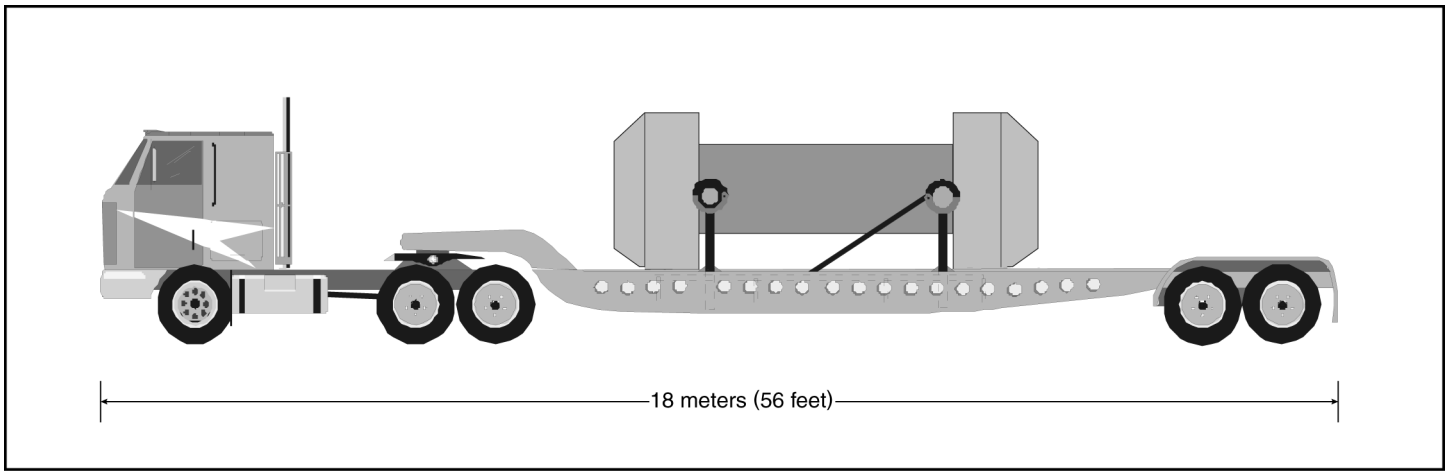

Source: DOE.

Although the shipping container is the most important component in preventing release and dispersal of spent fuel in transit, NRC also requires transporters of the spent fuel to implement measures designed to further protect spent fuel shipments from sabotage. For example, transporters of spent fuel must ensure that shipments are under surveillance, that arrangements have been made with local law enforcement agencies for their response in the event of an emergency, and that rail and highway routes have been approved by NRC. NRC had also required that armed escorts be either aboard the shipping vehicle or in a following vehicle in areas of high population; NRC has since strengthened the security required of shipments following the September 11, 2001, terrorist attacks.

Requirements for Preventing Release of Spent Fuel in Wet Storage

Spent fuel pool designs must meet specific performance criteria before NRC can issue a license for construction or operation. The requirements focus on ensuring that the safety features of the pool survive certain natural phenomena or accidents to ensure that, among other things, the pool will retain water and keep the stored fuel sufficiently cool. Spent fuel in wet storage is also protected by the physical security measures in place at the storage site.

As part of the licensing process prior to construction and operation, utilities must submit reports that analyze the likelihood of certain natural phenomena, such as earthquakes, hurricanes, floods, and tidal waves. Using probability analyses, historical information, and current information on seismology, geology, meteorology, and hydrology, the utilities must determine the risks of certain types of natural phenomena. Then the utilities must show that the proposed pool designs would survive the most severe natural phenomena or combinations of less severe phenomena expected for that particular area. The utilities must also perform the same exercise for the likelihood and severity of certain accidents, including airplane crashes. For example, pools constructed near airports may have to be designed to withstand certain types of accidental airplane crashes.

Consequently, although the specific designs of wet storage pools vary from site to site, they are massive, robust structures. Pools are typically 30 to 60 feet long, 20 to 40 feet wide, and 40 feet deep. Pools could nearly hold three semi-truck tractor-trailers parked side-by-side and stacked three deep. The pool is contained by a structure consisting of a 1/8 inch to 1/4 inch stainless steel liner, and 4- to 6-foot thick walls of steel-reinforced concrete. Generally, the pools are contained in other buildings. The roofs of some of these buildings may be made from industrial-type corrugated steel. The assemblies, stored vertically in racks, must be immersed at least

20 feet below the surface of the water in order to keep the fuel cool and to provide a sufficient radiation barrier. See figure 5 for a photograph of a wet storage pool.

Figure 5: A Wet Storage Pool

Source: Nuclear Energy Institute.

Spent fuel pools are also protected by the physical security measures in place at the facilities where they are located. About 95 percent of the spent fuel inventory is stored in pools, most of which are located at operating nuclear reactors. The perimeters of these reactor sites are secured by fences topped with barbed wire, vehicle barriers, and intrusion detection systems—including perimeter cameras and motion detection technology—that are monitored 24 hours per day. Access to the building containing the wet storage pools is impeded by locked steel doors capable of surviving armed assault and security checkpoints where a person's identity must be verified and where security searches take place. Finally, these facilities are manned by a force of armed guards.

In addition, nuclear power plants are required to coordinate an emergency response to the site in the event of a terrorist or sabotage event. The coordination requires contingency plans and joint exercises with local law enforcement agencies to ensure an adequate and timely response to

an event. Since the terrorist attacks of September 11, 2001, NRC has added additional requirements, including additional armed guards and vehicle barriers.

Requirements for Preventing Release of Spent Fuel in Dry Storage

NRC requires that spent fuel in dry storage be stored in containers that protect workers and other nearby persons from significant amounts of radiation, and that can survive operational accidents at the storage site, as well as extreme meteorological and other natural events. In addition, fuel in dry storage is protected by physical security measures in place at the storage site.

Among other things, dry storage containers must be capable of surviving

- a drop test, in which containers are tested by a drop from the height to which it would be lifted to during operations;
- a tip-over test, testing containers against seismic, weather, and other forces or accidents that could knock over 100- to 150-ton containers,
- an explosion test, in which containers are tested against nearby explosions and the resulting pressures created by the blasts;
- a tornado and tornado missile test, in which high winds and tornado missiles are simulated;
- a seismic test, in which containers are tested against the seismic motions that might be expected to occur in its geologic area (certification requirements may differ from region to region);
- a flood test, in which containers are analyzed for floods; and
- a fire test, in which containers are engulfed at temperatures up to 1,475 degrees Fahrenheit for 30 minutes.

Manufacturers must provide NRC with information on how well a container design meets these performance requirements. NRC does not require physical tests of the containers, but it accepts information derived from scaled physical tests and computer modeling.

As with shipping containers, to meet these performance requirements, certified dry storage containers are massive and robust. A typical dry storage container consists of a 1-inch thick steel container housing the spent fuel. At some facilities, the containers are placed horizontally in garage-sized bunkers constructed of concrete. The concrete protects nearby workers and the public from radiation. At other facilities, the container is encased in an outer cask. The outer cask typically is constructed of steel-reinforced concrete, 18 or more inches thick. Like the concrete bunkers, the outer cask shields workers and the public from radiation. The free-standing, upright units, stored on concrete pads, can weigh from 100 to 150 tons each with nearly 90 percent of that consisting of the container weight. A dry storage container can store between 7 and 68 assemblies, depending on the size of the container. See figure 6 for an illustration of a dry storage container.

Figure 6: A Spent Fuel Dry Storage Container

At some nuclear reactors across the country, spent fuel is kept on site, above ground, in systems basically similar to the one shown here.

1 Once the spent fuel has cooled, it is loaded into special canisters, each of which is designed to hold about two dozen assemblies. Water and air are removed. The canister is filled with inert gas, welded shut, and rigorously tested for leaks. It may then be placed in a "cask" for storage or transportation.

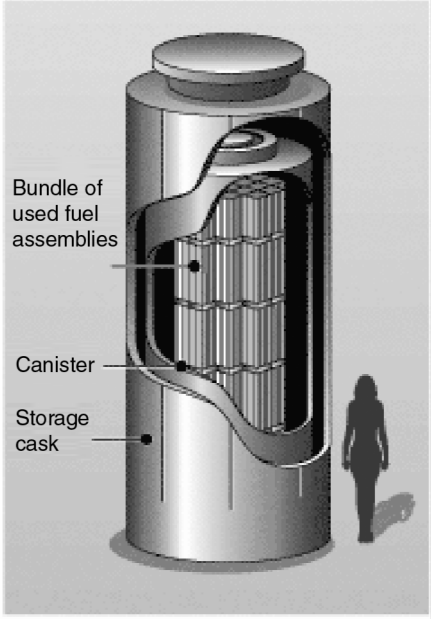

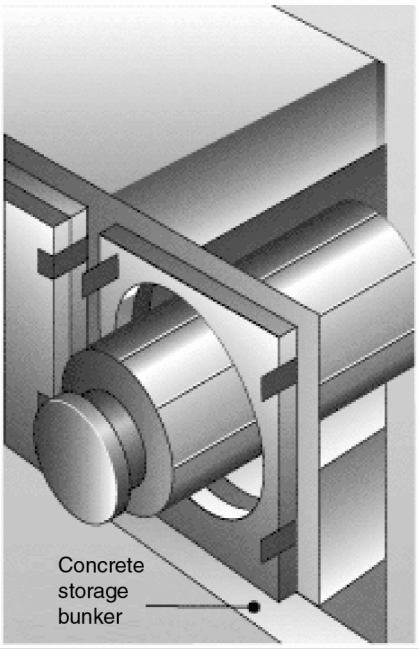

2 The canisters can also be stored in above ground concrete bunkers, each of which is about the size of a one-car garage. Eventually they may be transported elsewhere for storage.

Source: NRC.

In addition to the physical performance requirements of dry storage containers, the containers are protected by the physical security measures in place at the facilities where they are stored. Dry storage containers at operating nuclear power plants generally benefit from the physical security measures already in place at the sites. The large majority of spent fuel in dry storage is located at operating nuclear power plants. For dry storage containers situated away from a reactor site, NRC requires vehicle barriers, fences, intrusion detection systems, and guards. The guards are also able to contact local law enforcement agencies for assistance, if required. NRC requires that dry storage facilities coordinate response plans with local law enforcement agencies to ensure assistance can be readily provided, if needed. In the wake of the September 11, 2001, terrorist attacks, NRC issued orders to dry storage facility licensees that required enhanced security measures, including additional protections against a vehicle bomb threat.

Appendix II: Additional Information on Studies on the Safety and Security of Spent Fuel in Transit

The human health implications of sabotage events and accidents involving spent nuclear fuel shipments described in the report are based on computer-based engineering and other analytic models that rely, in part, on physical experiments. In addition, these studies are the most recent in a series of studies that date back to the 1970s. According to NRC and DOE, better data and improved analytic tools over the years have significantly enhanced the agencies' confidence in the results of these studies. This appendix provides an overview of the methodology of the most recent studies, as well as the approach and results of previous studies.

Sabotage Studies

Methodology of Most Recent Studies. The 1999 Sandia National Laboratory study was undertaken at the request of DOE for use in its preparation of an environmental impact statement for the Yucca Mountain repository.[1] The study relied on computer models to estimate how the two selected armor-piercing missiles would damage shipping containers. Although no physical tests or experiments were conducted in this study, the study used computer models that were validated using the results of previous studies that included experimental data.

Two of the most important factors considered in designing the study were the types of shipping containers and the weapons selected for analysis. For the shipping containers, the study used truck and rail containers considered representative of those that would be used to transport the spent fuel likely to be shipped in the early decades of the 21st Century. NRC's performance standard for these containers requires that they prevent release of significant amounts of radiation under normal operating conditions and in accident scenarios. For example, radiation levels at the exterior of the container must remain below specified minimal levels after a series of tests to simulate accident conditions, including an impact test, in which the container is dropped from 30 feet onto a flat, unyielding surface.

In selecting the weapons used in the analysis, the authors researched the latest information available and chose weapons they believed represented

[1] Sandia National Laboratory, *Projected Source Terms for Potential Sabotage Events Related to Spent Fuel Shipments*, SAND 99-0963, a report prepared at the request of the Department of Energy, Albuquerque, N.Mex., June 1999.

the two weapons that would penetrate spent fuel shipping containers, and which could also be available to terrorists.[2]

To ensure that the analysis would represent the upper limit of possible damage, the authors made conservative assumptions, including the following:

- No security measures were in place, such as armed guards who travel with spent fuel shipments and who are required to have the capability to contact local law enforcement personnel in the event of an attack.
- The weapons would be employed at a distance from these containers that would result in maximum damage to the container and that the weapon would strike the container dead center; if the missile were to strike higher or lower, it could be deflected by the cylindrical shape of most containers, and penetration of the container would be lessened or not occur at all.

Previous Studies. The 1999 Sandia study is the most recent in a series of federally sponsored studies dating back to the 1970s that have examined the ability of armor-piercing weapons to penetrate spent fuel containers. A draft version of a Sandia study from 1978, for example, concluded that a successful sabotage attack on a spent fuel container would not cause prompt fatalities but could cause several hundred latent cancer fatalities in a densely populated urban area.[3] The final version of this study reduced the total latent cancer fatalities to fewer than 100, based on a re-evaluation of the quantity of radioactive material released.[4] Based largely on the initial draft of this study, NRC established its regulations for security of spent fuel in transit. Because this study was based on a conservative set of analytical assumptions instead of on experimental data, there was a high degree of uncertainty regarding the quantities of radioactive material released, and the human health consequences. Consequently, in 1983, DOE commissioned Sandia National Laboratory to conduct physical tests, in which armor-penetrating missiles were fired at shipping containers

[2] According to NRC, information on the types of weapons used in this analysis is classified.

[3] Sandia National Laboratory, *Transport of Radionuclides in Urban Environs: Working Draft Assessment*, SAND 77-1927, Albuquerque, N.Mex., 1977.

[4] Sandia National Laboratory, *Transport of Radionuclides in Urban Environs: Draft Environmental Assessment* NUREG/CR-0743, Albuquerque, N.Mex., July 1980.

containing mock spent fuel assemblies.[5] The study found that, under the worst-case scenario, about 24 ten-thousandths (0.0024) of 1 percent of the total solid fuel inventory in the container could be released as respirable particles.[6] To estimate the human health impact, the study included conservative assumptions, including that the attacks occurred in Manhattan, in New York City, on a business day, that the fuel had been removed from the reactor for only 150 days (and thus was comparatively more radiologically dangerous), and that no evacuation took place to limit human exposure. Based on these results and assumptions, the study predicted no early deaths and between two and seven long-term latent cancer fatalities.

Accident Studies

Methodology of Most Recent Studies. According to NRC, the 2000 Sandia National Laboratory study was conducted to address three developments—the likelihood that spent fuel shipments would be increasing as a result of the progress on the Yucca Mountain repository, the use of containers and transportation routes that differed from those considered in previous studies, and the increased effectiveness in risk assessment and computer modeling of spent fuel containers.[7] The overall objective of the study was to determine the degree of risk involved in shipping spent fuel by truck and rail.

The study examined the effects of severe collisions and fires on four types of shipping containers—a lead-lined steel truck container, a depleted uranium-lined steel truck container, a lead-lined steel rail container, and a monolithic steel container. The study relied on computer analysis to estimate the probability of such events and the quantity of radioactive material that might be released. The analysis developed 19 representative truck accidents and 21 representative rail accidents.

[5] According to Sandia National Laboratory officials, in addition to the high cost, environmental and health regulations generally prevent the use of actual spent fuel that leads to the use of mock fuel—a nonradioactive material—that generally displays enough of the same properties as spent fuel for purposes of these analyses.

[6] Sandia National Laboratory, *An Assessment of the Safety of Spent Fuel Transportation in Urban Environs*, Albuquerque, N.Mex., June 1983.

[7] U.S. Nuclear Regulatory Commission, *Reexamination of Spent Fuel Shipment Risk Estimates*, NUREG/CR-6672, Washington, D.C., March 2000.

The study simulated the effect on each of the truck and rail containers after slamming them into a rigid surface from a variety of angles at 30, 60, 90, and 120 miles per hour. None of the cases modeled showed that the body of the container would fail. Moreover, the modeling showed that the seals around the lid at each end of the truck container would not allow a release at 30, 60, and 90 miles per hour, although they may leak at 120 miles per hour. The results from modeling the two different rail containers, however, showed that the seals may leak, for some collisions at a speed of 60 miles per hour, depending on the angle of impact.

DOE's study that predicted the health effects of these releases used a computer code. The code calculated the dispersion of radioactive particles and the resultant dose to the population. To estimate latent cancer deaths, DOE made a number of key assumptions. DOE's analysis assumed the accident occurred in the most populous center of an urban area and that the population distribution from the accident site in the urban center to the outer fringes was similar to the average populations—projected to the year 2035—of the 20 largest U.S. metropolitan areas, plus Las Vegas, Nevada. Stable weather conditions—with comparatively slow wind speeds—were assumed to prevail at the time of the accident.[8] Finally, the population was assumed to be exposed to remnants of the release for 1 year after the accident, with no evacuation or cleanup.

Previous Studies. The 2000 Sandia study reexamined the risks associated with the transport of spent fuel by truck and rail and compared the results to two previous studies—one conducted by NRC in 1977 and one performed by DOE's Lawrence Livermore National Laboratory in 1987. According to NRC, the 2000 Sandia study extended the methods used in the 1987 report for container analysis and used improved risk assessment methods.

The 2000 Sandia study found that previous NRC-commissioned studies overestimated the risks of human exposure due to transportation accidents. According to NRC and Sandia officials, they have become more confident in their results as analytical techniques and data have improved. In 1977, NRC examined the risks of shipping a variety of radioactive materials, including spent fuel.[9] At that time, NRC determined that the

[8] Higher wind speeds would result in faster dispersion and hence a lower population dose.

[9] U.S. Nuclear Regulatory Commission, *Final Environmental Statement on the Transportation of Radioactive Material by Air and Other Modes*, NUREG-0170, Washington, D.C., 1977.

risks of accidental releases involved in shipping spent fuel and other radioactive materials were quite small—specifically, the study estimated latent cancer deaths to be about 3 in 200 years of shipping spent fuel at estimated rates for 1985. The study concluded that the existing NRC requirements were adequate to protect public health. Partly because this study was based on conservative engineering judgments and did not include physical tests of shipping containers in severe accidents, NRC subsequently commissioned a study published in 1987 that found that the risks of spent fuel releases under transportation accident conditions were much smaller.[10] Performed by Lawrence Livermore National Laboratory for NRC, this study included a more sophisticated analysis than the 1977 study, using historical data on past transportation accidents to determine the likelihood of specific accident scenarios. The study then used a computer-based analysis of accident scenarios involving collisions and fire temperatures exceeding NRC standards. The 1987 study found that in 99.4 percent of all rail and truck accidents, the container would experience no significant damage, and no radioactive material would be released.

[10] Lawrence Livermore National Laboratory, *Shipping Container Response to Severe Highway and Railway Accident Conditions*, NUREG/CR-4829, a report prepared at the request of the Nuclear Regulatory Commission, 1987.

Appendix III: Comments from the Department of Energy

Department of Energy
Washington, DC 20585

JUN 06 2003

Ms. Robin M. Nazzaro
Director
Natural Resources and Environment
U. S. General Accounting Office
Washington, DC 20548

Dear Ms. Nazzaro:

The Office of Civilian Radioactive Waste Management (OCRWM) has reviewed the General Accounting Office's (GAO) draft report, "Spent Nuclear Fuel: Low Risk of Harm from Terrorist Attacks and Severe Accidents, but Potential Options Exist to Further Enhance Security" (GAO-03-426). In its draft report, GAO recommends that, as the Department develops its plans for transporting spent nuclear fuel to Yucca Mountain, it assess potential benefits and costs of options to enhance the safety and security of spent nuclear fuel shipments. GAO cited the following potential enhancements: 1) minimizing the total number of shipments, 2) shipping spent nuclear fuel in an order that further minimizes risk, and 3) transporting spent nuclear fuel on trains dedicated to hauling exclusively spent nuclear fuel.

OCRWM concurs with GAO's recommendation to perform such an assessment, with the following exception. In his April 25, 2002, testimony before the House Subcommittees on Railroads and Highways and Transit, Mr. Allan Rutter, Administrator of the Federal Rail Administration (FRA), stated that the FRA is conducting a thorough study of the safety and security implications of transporting spent nuclear fuel by dedicated trains versus general freight. Mr. Rutter stated that FRA expects to issue their report this year. We believe that it is appropriate to await the outcome of this evaluation and be informed by FRA's results, rather than duplicate their efforts. Since it will be approximately seven years before OCRWM begins transporting spent nuclear fuel, we have the ability to incorporate relevant recommendations in our operational plans.

We believe that the draft report is an accurate and balanced representation of the issues associated with the in-transit security of spent nuclear fuel, and we have enclosed specific comments that we believe would enhance the technical accuracy of the draft report.

We appreciate the opportunity to offer comments on your draft report.

Sincerely,

Dr. Margaret S. Y. Chu, Director
Office of Civilian Radioactive
Waste Management

Enclosure

Printed with soy ink on recycled paper

Appendix IV: Comments from the Nuclear Regulatory Commission

UNITED STATES
NUCLEAR REGULATORY COMMISSION
WASHINGTON, D.C. 20555-0001

June 20, 2003

Ms. Robin M. Nazarro
Director, Science Issues
Natural Resources and Environment
United States General Accounting Office
441 G Street, NW
Washington, DC 20548

Dear Ms. Nazarro:

I would like to thank you for the opportunity to review and submit comments on the draft report, "SPENT NUCLEAR FUEL: Low Risk of Harm from Terrorist Attacks and Severe Accidents, but Potential Options Exist to Further Enhance Security" (GAO-03-426). The U.S. Nuclear Regulatory Commission (NRC) appreciates the time and effort that you and your staff have taken to review this important topic. Overall, the report provides a reasonable characterization of the current understanding of risks associated with spent fuel storage.

The NRC does not consider the results of NUREG-1738, "Technical Study of Spent Fuel Pool Accident Risk at Decommissioning Nuclear Power Plants," to be appropriate for characterizing the consequences of terrorist attacks at spent fuel pools as it was prepared for a very different purpose. The results of this study, which was not endorsed by the Commission and which several commenters asked be peer-reviewed in light of its obvious over-conservatisms, are considered to be unrealistically conservative. That is one of the reasons why we are reevaluating the predicted results of such events. It is very important when discussing the results of these analyses that the report clearly state that these analyses were overly conservative. The report also references the results of NUREG/CR-6672, "Reexamination of Spent Fuel Shipment Risk Estimates." The analyses in this document are similarly overly conservative. We have enclosed a recent letter the Commission received from the Chairman of the Advisory Committee on Nuclear Waste (ACNW). The ACNW's review stated that NUREG-6672 overestimates the radiological releases by several orders of magnitude. The Committee also states that it "believes that it is unfortunate that such overestimates of consequences are published by NRC in NUREG reports, because they get separated from the caveats and are used as though they were valid best estimates." The Commission agrees with the ACNW. The enclosure provides some specific comments on the draft report which we hope help to clarify these points.

Specific comments relative to factual accuracy, clarity, and completeness of the report are provided in Enclosure 2. In addition, we have communicated separately with the GAO review team relative to minor editorial comments.

Ms. Robin M. Nazzaro 2

Should you have any questions about these comments, please contact either Mr. William Dean at (301) 415-1703, or Ms. Melinda Malloy, at (301) 415-1785, of my staff.

Sincerely,

William D. Travers
Executive Director
for Operations

Enclosures:
1. ACNW Letter dated 6/4/03
2. Specific Comments on Draft Report GAO-03-426

cc: Daniel Feehan, GAO (Denver)
Robert Sanchez, GAO (Denver)

Appendix V: GAO Contact and Staff Acknowledgments

GAO Contact

Daniel J. Feehan (303) 572-7352

Acknowledgments

In addition to the individual named above, Doreen Feldman, Michael Hartnett, Gary Jones, Cynthia Norris, Robert Sanchez, Amy Stewart, Barbara Timmerman, and Dwayne Weigel made key contributions to this report.

(360181)

GAO's Mission

The General Accounting Office, the audit, evaluation and investigative arm of Congress, exists to support Congress in meeting its constitutional responsibilities and to help improve the performance and accountability of the federal government for the American people. GAO examines the use of public funds; evaluates federal programs and policies; and provides analyses, recommendations, and other assistance to help Congress make informed oversight, policy, and funding decisions. GAO's commitment to good government is reflected in its core values of accountability, integrity, and reliability.

Obtaining Copies of GAO Reports and Testimony

The fastest and easiest way to obtain copies of GAO documents at no cost is through the Internet. GAO's Web site (www.gao.gov) contains abstracts and full-text files of current reports and testimony and an expanding archive of older products. The Web site features a search engine to help you locate documents using key words and phrases. You can print these documents in their entirety, including charts and other graphics.

Each day, GAO issues a list of newly released reports, testimony, and correspondence. GAO posts this list, known as "Today's Reports," on its Web site daily. The list contains links to the full-text document files. To have GAO e-mail this list to you every afternoon, go to www.gao.gov and select "Subscribe to daily E-mail alert for newly released products" under the GAO Reports heading.

Order by Mail or Phone

The first copy of each printed report is free. Additional copies are $2 each. A check or money order should be made out to the Superintendent of Documents. GAO also accepts VISA and Mastercard. Orders for 100 or more copies mailed to a single address are discounted 25 percent. Orders should be sent to:

U.S. General Accounting Office
441 G Street NW, Room LM
Washington, D.C. 20548

To order by Phone:	Voice:	(202) 512-6000
	TDD:	(202) 512-2537
	Fax:	(202) 512-6061

To Report Fraud, Waste, and Abuse in Federal Programs

Contact:

Web site: www.gao.gov/fraudnet/fraudnet.htm
E-mail: fraudnet@gao.gov
Automated answering system: (800) 424-5454 or (202) 512-7470

Public Affairs

Jeff Nelligan, Managing Director, NelliganJ@gao.gov (202) 512-4800
U.S. General Accounting Office, 441 G Street NW, Room 7149
Washington, D.C. 20548

PRINTED ON RECYCLED PAPER